HOSHIZAKI

Service Manual

Commercial Series
Refrigerated Kitchen Equipment

Models
Upright S-Series

hoshizakiamerica.com

Number: 73207
Issued: 8-3-2015
Revised: 6-24-2016

⚠ WARNING

Only qualified service technicians should install and service the appliance. To obtain the name and phone number of your local Hoshizaki Certified Service Representative, visit www.hoshizaki.com. No service should be undertaken until the technician has thoroughly read this Service Manual. Failure to service and maintain the appliance in accordance with this manual will adversely affect safety, performance, component life, and warranty coverage. Proper installation is the responsibility of the installer. Product failure or property damage due to improper installation is not covered under warranty.

Hoshizaki provides this manual primarily to assist qualified service technicians in the service and maintenance of the appliance.

Should the reader have any questions or concerns which have not been satisfactorily addressed, please call, send an e-mail message, or write to the Hoshizaki Technical Support Department for assistance.

Phone: 1-800-233-1940; (770) 487-2331
Fax: 1-800-843-1056; (770) 487-3360

E-mail: techsupport@hoshizaki.com

HOSHIZAKI AMERICA, INC.
618 Highway 74 South
Peachtree City, GA 30269
Attn: Hoshizaki Technical Support Department

Web Site: www.hoshizaki.com

NOTE: To expedite assistance, all correspondence/communication MUST include the following information:

- Model Number _____
- Serial Number _____
- Complete and detailed explanation of the problem.

IMPORTANT
This manual should be read carefully before the appliance is serviced. Read the warnings and guidelines contained in this manual carefully as they provide essential information for the continued safe use, service, and maintenance of the appliance. Retain this manual for any further reference that may be necessary.

CONTENTS

Important Safety Information 5
I. General Information 8
A. Construction 8
B. Refrigeration Flow Chart 10
II. Sequence of Operation and Service Diagnosis 11
A. Sequence of Operation Flow Charts 11
1a. Refrigerator Auxiliary Code F-6 and Earlier 11
1b. Refrigerator: Auxiliary Code F-7 and Later 12
2a. Freezer: Auxiliary Code F-7 and Earlier 13
2b. Freezer: Auxiliary Code F-8 and Later 14
B. Service Diagnosis 15
1a. Refrigerator: Auxiliary Code F-6 and Earlier 16
1b. Refrigerator: Auxiliary Code F-7 and Later 19
2a. Freezer: Auxiliary Code F-7 and Earlier 22
2b. Freezer: Auxiliary Code F-8 and Later 27
C. Control Module Check 32
D. Thermistor Check 34
E. Diagnostic Tables 35
III. Controls and Adjustments 37
A. Control Module 37
1. Display Icons 37
2. Display Layout 37
3. Control Module Connections 38
B. Temperature 39
1. Default Settings 39
2. Temperature Setpoint 39
3. Changing the Temperature Display Scale (°F or °C) 39
C. Defrost 40
D. Alarm Safeties 41
E. Safety Devices 42
F. Mullion/Perimeter Heater 42
IV. Replacement of Components 43
A. Service for Refrigerant Lines 43
B. Important Notes for Component Replacement 46
C. Door Reversal 46
V. Maintenance 47
VI. Preparing the Appliance for Periods of Non-Use 48
VII. Disposal 49

VIII. Technical Information 50
A. Electrical and Refrigerant Data 50
B. Wiring Diagrams 51
1. CR1S-FS/FSL/HS/HSL Auxiliary Code E-5 and Earlier 51
2. CR2S-FS/HS Auxiliary Code E-5 and Earlier 52
3. CR1S-FGY/FS/FSL/HS/HSL,
CR2S-FGY/FS/HS/FGY,
CR3S-FS/HS Auxiliary Code E-6 to F-6 53
4. CR1S-FGE/FGECL/FGECR/FS/FSL/HS/HSL,
CR2S-FGE/FS/HS Auxiliary Code F-7 and Later 54
5. CF1S-FS/FSL/HS/HSL Auxiliary Code E-5 and Earlier 55
6. CF1S-FS/FSL/HS/HSL Auxiliary Code E-6 to F-7 56
7. CF1S-FGE/FGECL/FGECR/FS/HS F-8 and Later 57
8. CF2S-FS/HS Auxiliary Code E-5 and Earlier 58
9. CF2S-FS/FSL/HS/HSL Auxiliary Code E-6 to F-7 59
10. CF2S-FGE/FGECL/FGECR/FS/FSL/HS/HSL Auxiliary Code F-8 and Later 60
11. CR3S-FS/HS Receptacle Box Connection 61

Important Safety Information

Throughout this manual, notices appear to bring your attention to situations which could result in death, serious injury, or damage to the appliance or damage to property.

⚠ WARNING **Indicates a hazardous situation which could result in death or serious injury.**

NOTICE **Indicates a situation which could result in damage to the appliance or property.**

IMPORTANT **Indicates important information about the use and care of the appliance.**

⚠ WARNING

The appliance should be destined only to the use for which it has been expressly conceived. Any other use should be considered improper and therefore dangerous. The manufacturer cannot be held responsible for injury or damage resulting from improper, incorrect, and unreasonable use. Failure to service and maintain the appliance in accordance with this manual will adversely affect safety, performance, component life, and warranty coverage.

To reduce the risk of death, electric shock, serious injury, or fire, follow basic precautions including the following:

- Only qualified service technicians should install and service the appliance.
- The appliance must be installed in accordance with applicable national, state, and local codes and regulations.
- The appliance requires an independent power supply of proper capacity. See the nameplate for electrical specifications. Failure to use an independent power supply of proper capacity can result in a tripped breaker, blown fuse, or damage to existing wiring. This could lead to heat generation or fire.
- To reduce the risk of electric shock, do not touch the plug or power switch with damp hands.
- Make sure the power switch is in the "OFF" position before plugging in or unplugging the appliance to reduce the risk of electric shock.
- Before servicing, move the power switch to the "OFF" position. Unplug the appliance from the electrical outlet.

For 115VAC Models

- **THE APPLIANCE MUST BE GROUNDED:** The appliance is equipped with a NEMA 5-15 three-prong grounding plug to reduce the risk of potential shock hazards. It must be plugged into a properly grounded, independent 3-prong wall outlet. If the outlet is a 2-prong outlet, it is your personal responsibility to have a qualified electrician replace it with a properly grounded, independent 3-prong wall outlet. Do not remove the ground prong from the plug and do not use an adapter plug. Failure to follow these instructions may result in death, electric shock, or fire.

⚠ WARNING, continued

For 208-230VAC Models

- **THE APPLIANCE MUST BE GROUNDED:** The appliance is equipped with a NEMA L14-20 four-prong locking, grounding plug to reduce the risk of potential shock hazards. It must be plugged into a properly grounded, independent 4-prong wall outlet. If the outlet is a 3-prong outlet or a 4-prong non-locking outlet, it is your personal responsibility to have a qualified electrician replace it with a properly grounded, independent 4-prong locking wall outlet. Do not remove the ground prong from the plug and do not use an adapter plug. After plugging in, twist the plug clockwise to lock it into place. Failure to follow these instructions may result in death, electric shock, or fire.

For All Models

- The GREEN ground wire in the factory-installed power cord is connected to the appliance. If it becomes necessary to remove or replace the power cord, be sure to connect the power cord's ground wire.
- Do not use an extension cord.
- Do not use an appliance with a damaged power cord. The power cord should not be altered, jerked, bundled, weighed down, pinched, or tangled. Such actions could result in electric shock or fire. To unplug the appliance, be sure to pull the plug, not the cord, and do not jerk the cord. Before unplugging a 4-prong plug, rotate the plug counter-clockwise to unlock it.
- Do not splash, pour, or spray water directly onto or into the appliance. This might cause short circuit, electric shock, corrosion, or failure.
- Do not make any alterations to the appliance. Alterations could result in electric shock, injury, fire, or damage to the appliance.
- The appliance is not intended for use by persons (including children) with reduced physical, sensory, or mental capabilities, or lack of experience and knowledge, unless they have been given supervision or instruction concerning use of the appliance by a person responsible for their safety.
- Children should be properly supervised around the appliance.
- Do not climb, stand, or hang on the appliance or door or allow children or animals to do so. Do not climb into the appliance or allow children or animals to do so. Death or serious injury could occur or the appliance could be damaged.
- Be careful not to pinch fingers when opening and closing the door. Be careful when opening and closing the door when children are in the area.
- Open and close the doors with care. Doors opened too quickly or forcefully may cause injury or damage to the appliance or surrounding equipment.
- Do not use combustible spray or place volatile or flammable substances near the appliance. They might catch fire.
- Keep the area around the appliance clean. Dirt, dust, or insects in the appliance could cause harm to individuals or damage to the appliance.
- Do not throw anything onto the shelves or load any single shelf with more than 120 lb. (54.5 kg) of product. They might fall off and cause injury.

⚠ WARNING, continued

- Do not place anything on top of the appliance. Foreign objects or moisture could enter the appliance and result in electric shock or fire.
- The appliance is designed only for temporary storage of food. Employ sanitary methods. Use for any other purposes (for example, storage of chemicals or medical supplies such as vaccine and serum) could cause deterioration of stored items.
- Do not block air inlets or outlets, otherwise cooling performance may be reduced.
- Do not tightly pack the cabinet. Allow some space between items to ensure good air flow. Also allow space between items and interior surfaces.
- Do not put warm or hot foods in the cabinet. Let them cool first, or they will raise the cabinet temperature and could deteriorate other foods in the cabinet or overload the appliance.
- All foods should be wrapped in plastic film or stored in sealed containers. Otherwise foods may dry up, pass their smells onto other foods, cause frost to develop, result in poor appliance performance, or increase the likelihood of cross-contamination. Certain dressings and food ingredients, if not stored in sealed containers, may accelerate corrosion of the evaporator, resulting in failure.
- Do not store items near the air outlet. They might freeze up and crack or break causing a risk of injury or contamination of other food.

NOTICE

- Protect the floor when moving the appliance to prevent damage to the floor.
- Keep ventilation openings, in the appliance enclosure or in the built-in structure, clear of obstruction. Do not place anything on top of the appliance. Blockage of airflow could negatively affect performance and damage the appliance.
- To prevent deformation or cracks, do not spray insecticide onto the plastic parts or let them come into contact with oil.
- To avoid damage to the gasket, use only the door handle when opening and closing.

I. General Information

A. Construction

1. Solid Door Models

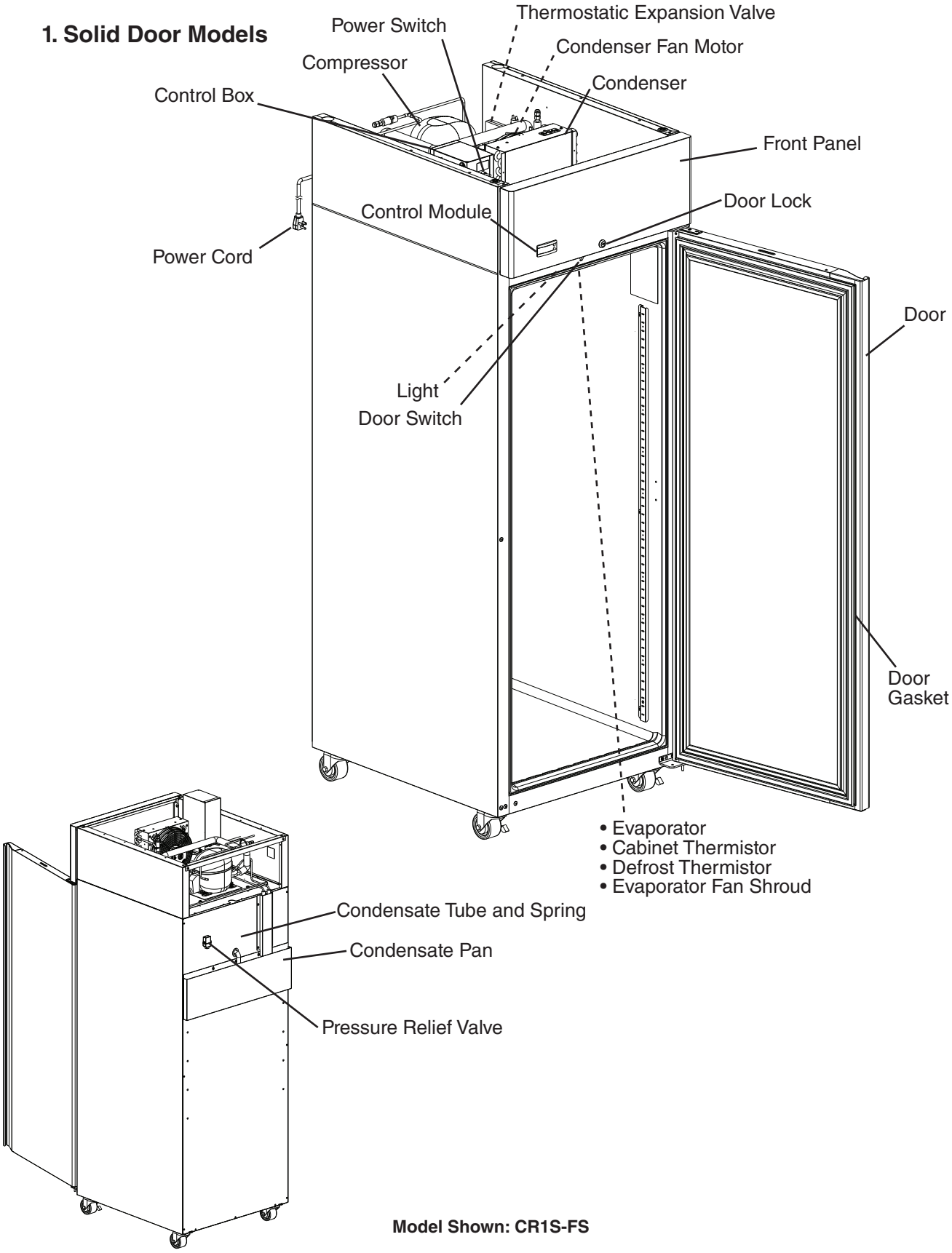

Model Shown: CR1S-FS

2. Glass Door Models

Thermostatic Expansion Valve
Condenser Fan Motor
Condenser
Compressor
Control Box
Front Panel
Power Cord
Door Lock
24VDC Driver FGE Glass Door Models
Power Switch
Control Module
Light Switch (glass door models only)
LED Lights FGE Glass Door Models
Door
• Evaporator
• Cabinet Thermistor
• Defrost Thermistor
• Evaporator Fan Shroud
Door Gasket

Model Shown: CR2S-FGE

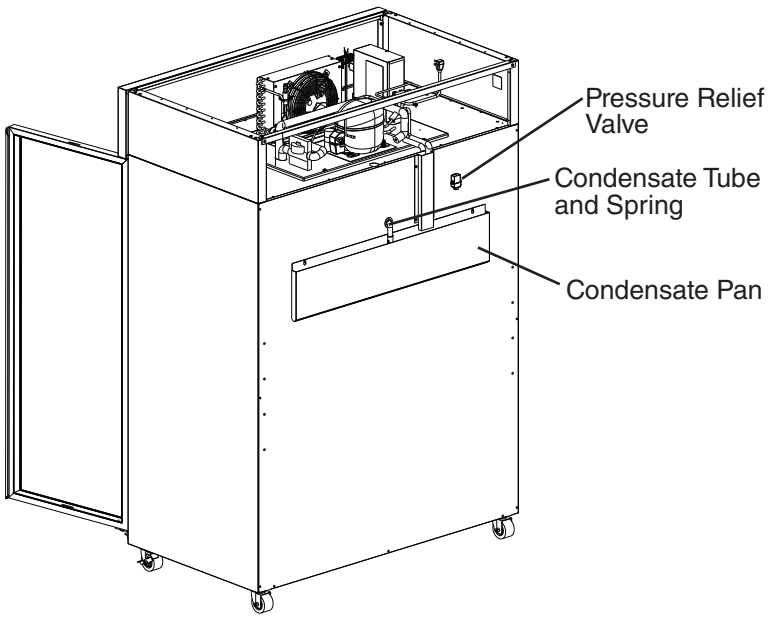

Model Shown: CR2S-FGE

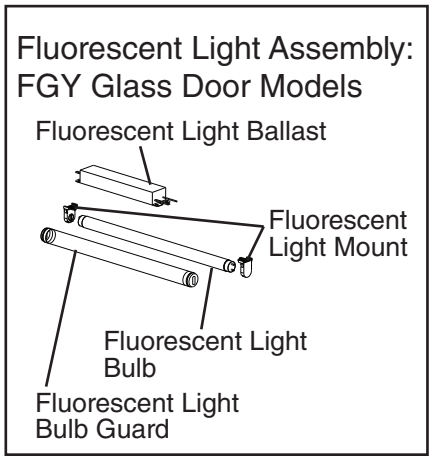

B. Refrigeration Flow Chart

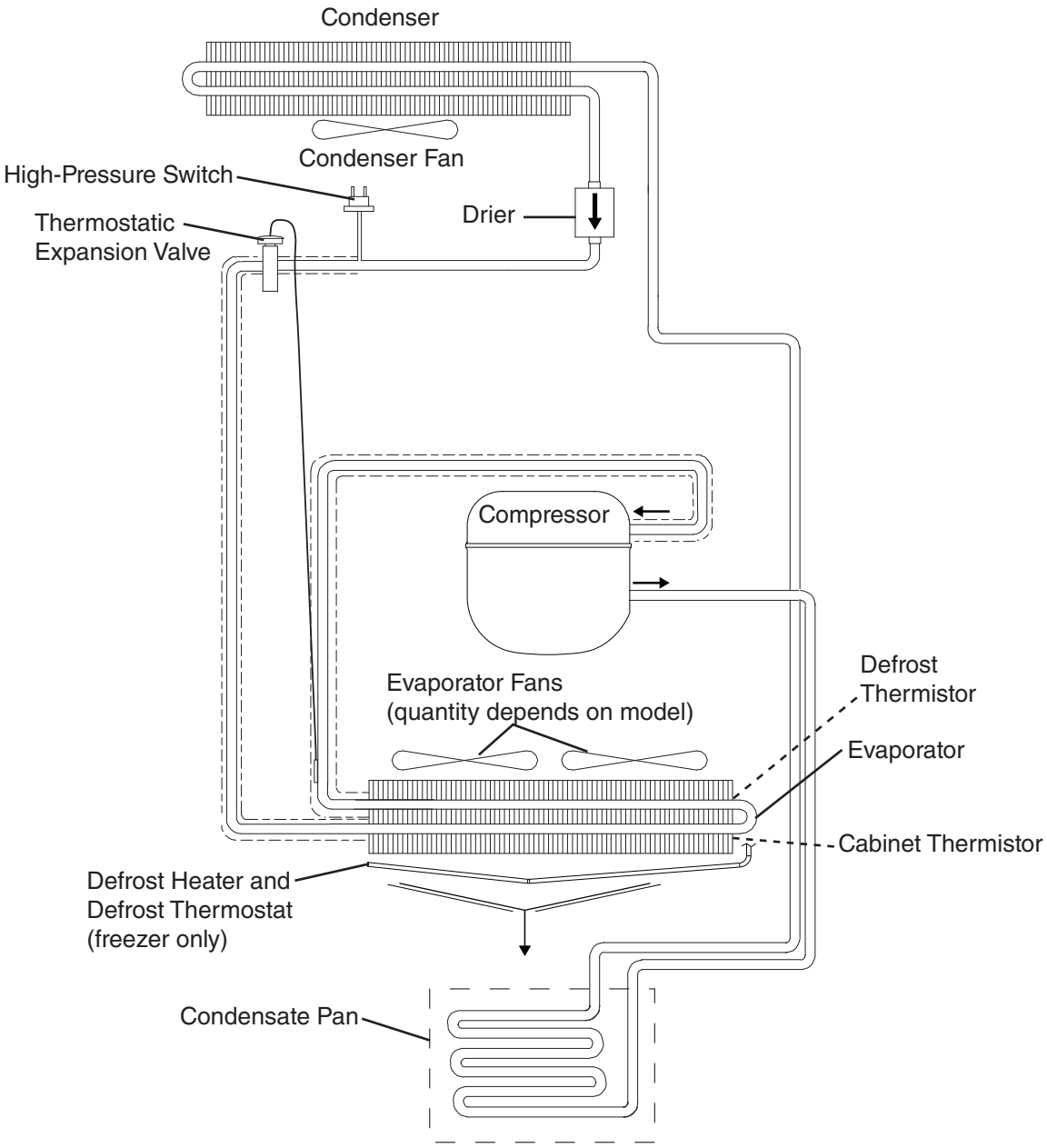

II. Sequence of Operation and Service Diagnosis

A. Sequence of Operation Flow Charts

1a. Refrigerator Auxiliary Code F-6 and Earlier

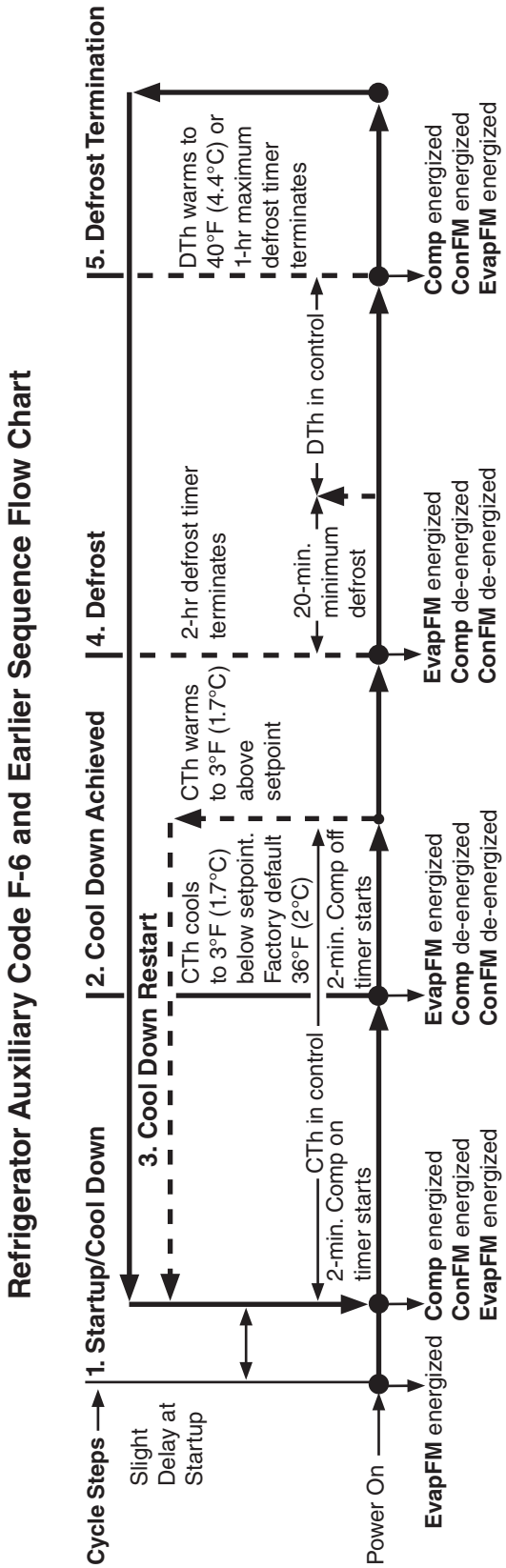

Note:
a) EvapFM de-energizes when door is opened on -FS models and when upper door is opened on -HS models.
b) 2-min. minimum Comp on timer starts when Comp energizes.
c) 2-min. minimum Comp off timer starts when Comp de-energizes.
d) 20-min. minimum defrost time.
e) 1-hr. maximum defrost time.
f) Temperature displayed during defrost.

Legend:
Comp-compressor
ConFM-condenser fan motor
CTh-cabinet thermistor
DTh-defrost thermistor
EvapFM-evaporator fan motor

1b. Refrigerator: Auxiliary Code F-7 and Later

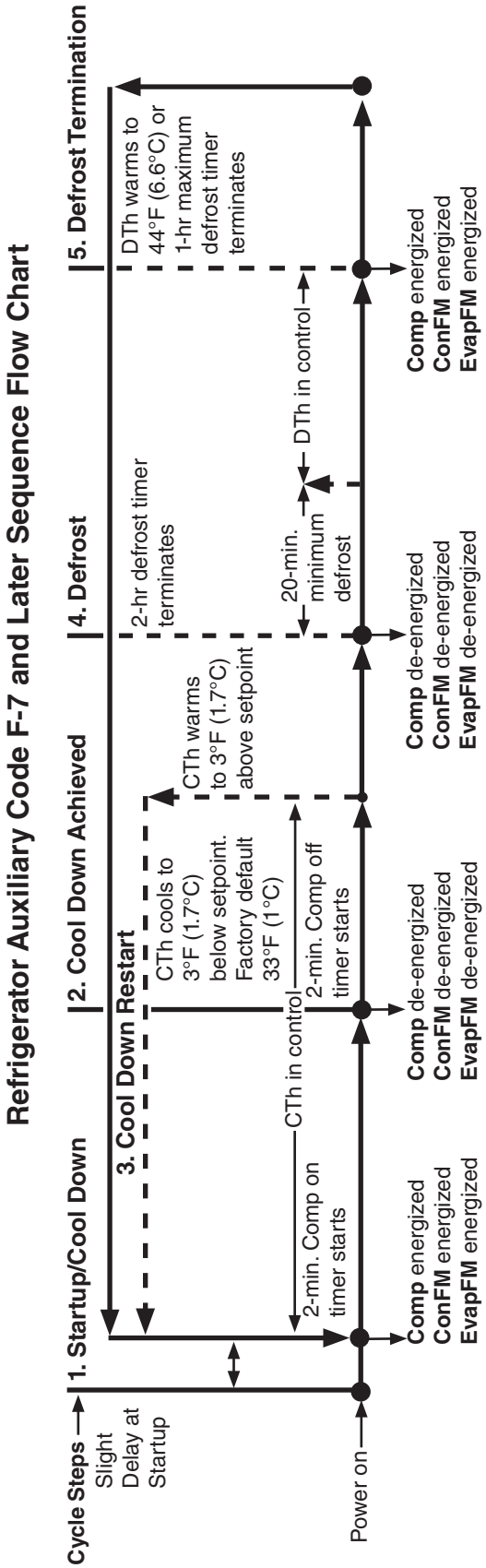

Legend:
Comp-compressor
ConFM-condenser fan motor
CTh-cabinet thermistor
DTh-defrost thermistor
EvapFM-evaporator fan motor

Note:
a) EvapFM de-energizes when door is opened on -FS models and when upper door is opened on -HS models.
b) 2-min. minimum Comp on timer starts when Comp energizes.
c) 2-min. minimum Comp off timer starts when Comp de-energizes.
d) 20-min. minimum defrost time.
e) 1-hr. maximum defrost time.
f) Temperature displayed during defrost.

2a. Freezer: Auxiliary Code F-7 and Earlier

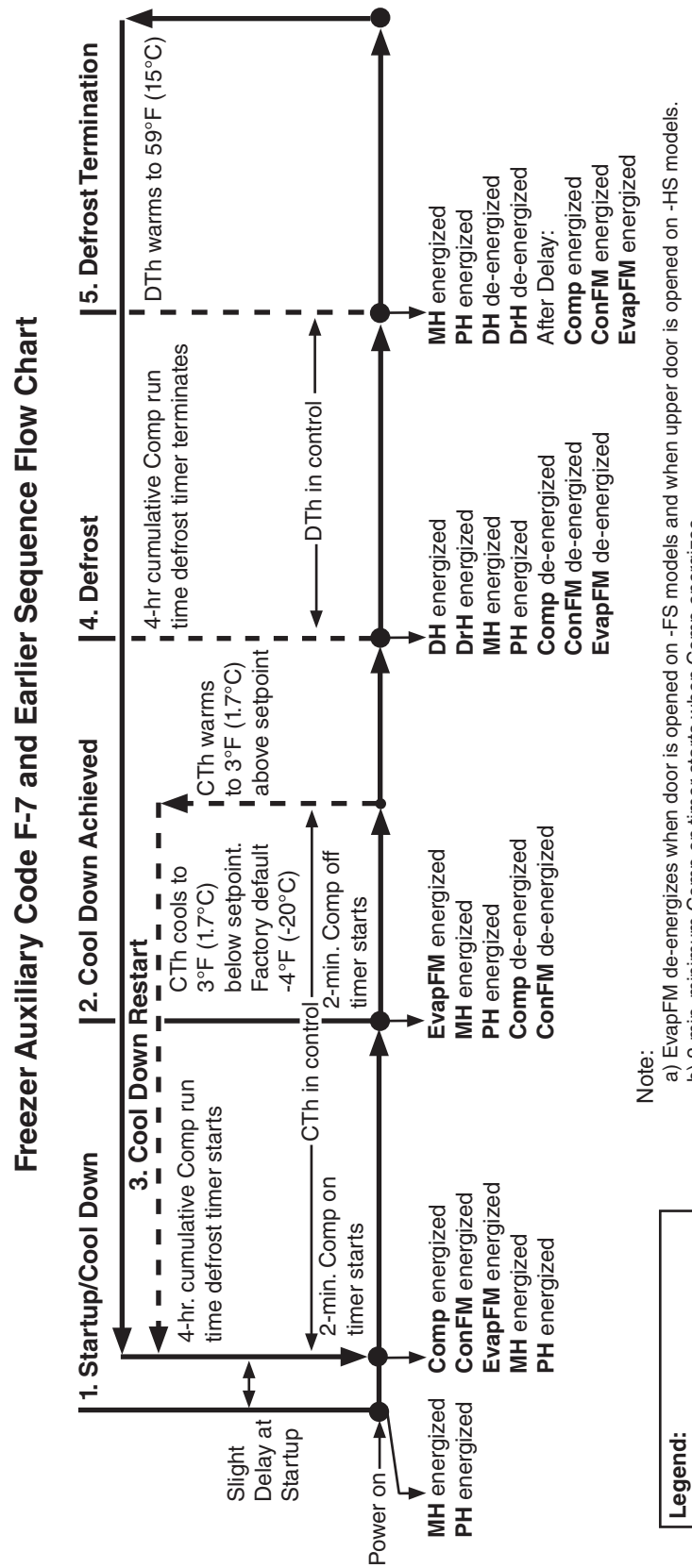

Note:
a) EvapFM de-energizes when door is opened on -FS models and when upper door is opened on -HS models.
b) 2-min. minimum Comp on timer starts when Comp energizes.
c) 2-min. minimum Comp off timer starts when Comp de-energizes.
d) 5-min. minimum defrost time.
e) 1-hr. maximum defrost time.
f) 3-min. Comp/ConFM delay timer starts when defrost termination temperature is met.
g) 7-minute EvapFM delay timer starts when defrost termination temperature is met (3-minute delay timer when defrost initiated manually)
h) 18-minute temperature display delay timer starts when defrost termination temperature is met (15-minute delay timer when defrost initiated manually).

Legend:
Comp-compressor
ConFM-condenser fan motor
CTh-cabinet thermistor
DH-defrost heater
DrH-drain heater
DTh-defrost thermistor
EvapFM-evaporator fan motor
MH-mullion heater
PH-perimeter heater

2b. Freezer: Auxiliary Code F-8 and Later

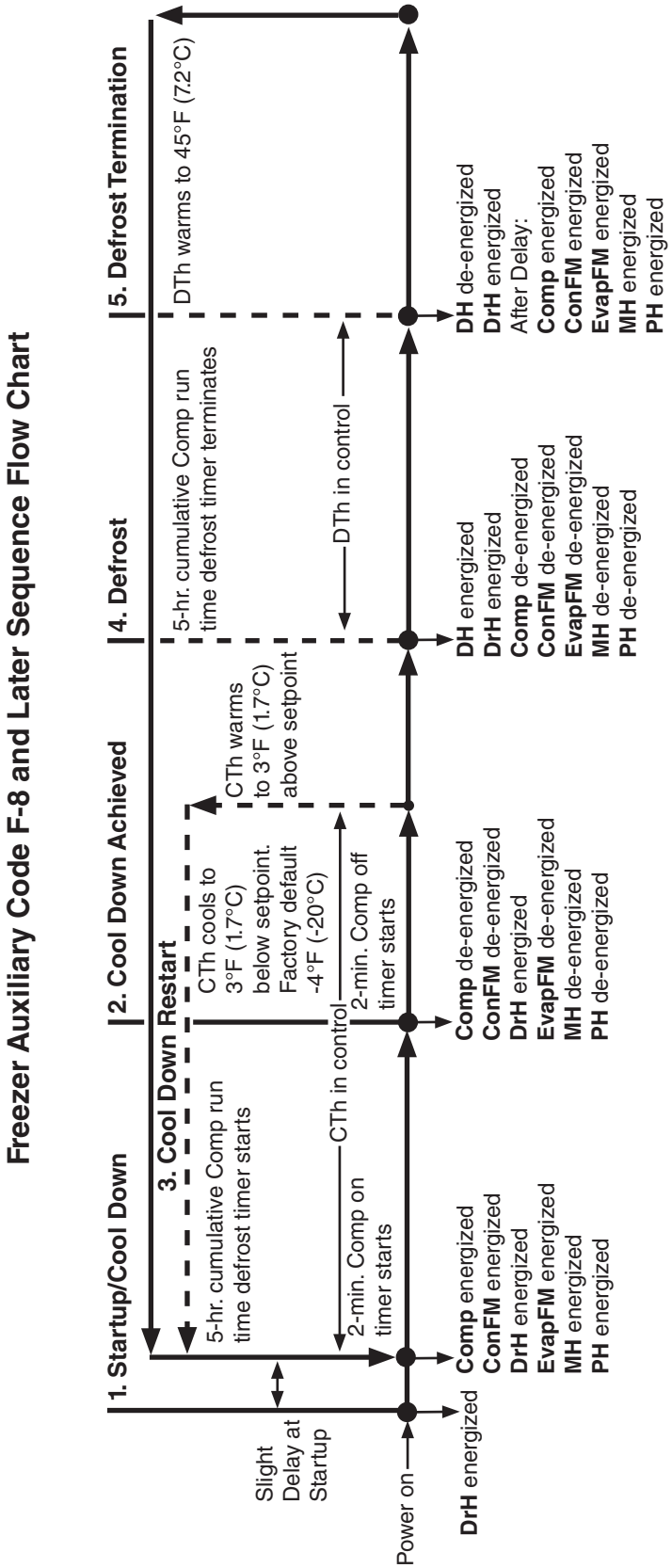

Legend:
Comp-compressor
ConFM-condenser fan motor
CTh-cabinet thermistor
DH-defrost heater
DrH-drain heater
DTh-defrost thermistor
EvapFM-evaporator fan motor
MH-mullion heater
PH-perimeter heater

Note:
a) EvapFM de-energizes when door is opened on -FS models and when upper door is opened on -HS models.
b) 2-min. minimum Comp on timer starts when Comp energizes.
c) 2-min. minimum Comp off timer starts when Comp de-energizes.
d) 5-min. minimum defrost time.
e) 1-hr. maximum defrost time.
f) 3-min. Comp/ConFM/MH/PH delay timer starts when defrost termination temperature is met.
g) 7-minute EvapFM delay timer starts when defrost termination temperature is met (3-minute delay timer when defrost initiated manually)
h) 18-minute temperature display delay timer starts when defrost termination temperature is met (15-minute delay timer when defrost initiated manually).

B. Service Diagnosis

⚠ WARNING

- The appliance should be diagnosed and repaired only by qualified service personnel to reduce the risk of death, electric shock, serious injury, or fire.
- Risk of electric shock. Use extreme caution and exercise safe electrical practices.
- Moving parts (e.g., fan blade) can crush and cut. Keep hands clear.
- Make sure all food zones are clean after the appliance is serviced.

NOTICE

- This appliance is not intended for outdoor use.
- Normal operating ambient temperature:
  – Refrigerators and Solid Door Freezers 45°F to 100°F (7.2°C to 38°C)
  – Glass Door Freezers 45°F to 80°F (7.2°C to 27°C)
  Operation of the appliance, for extended periods, outside of this normal temperature range may affect appliance performance.
- The appliance must not be located next to ovens, grills, or other high heat producing equipment.
- The appliance must not be located in a corrosive environment.
- Minimum Clearance:

Side	Top	Rear
3" (8 cm)	12" (31 cm)	1" (3 cm)

The diagnostic procedure is a sequence check that allows you to diagnose the electrical system and components. Before proceeding, check for correct installation and proper voltage per nameplate. Always choose a neutral (W) to establish a good neutral connection when checking high voltages. If the display is in alarm, see "III.D. Alarm Safeties."

IMPORTANT

The maximum allowable voltage variation is ±10 percent of the nameplate rating. 115VAC is used as a reference voltage when checking voltage to components. Voltage may vary depending on power supply.

1. Factory Default Settings:
   a) Temperature Setpoint:

Model	Auxiliary Code	Temperature Setpoint
Refrigerator	F-6 and Earlier	36°F (2°C)
	F-7 and Later	33°F (1°C)
Freezer	All	-4°F (-20°C)

   b) Temperature Display Scale: °F.

For further details, see "II.C. Control Module Check" or "III. Controls and Adjustments."

- There is a minimum 2-min. Comp on time and 2-min. Comp off time.

1) Move the power switch to the "OFF" position.
2) Unplug the appliance from the electrical outlet.
3) Remove the control box cover.
4) Plug the appliance back into the electrical outlet.
5) Move the power switch to the "ON" position.
6) Confirm 115VAC at the power switch. On 3-section models, also confirm proper supply voltage at the receptacle box (115VAC for refrigerator/208-230VAC for freezer).

1a. Refrigerator: Auxiliary Code F-6 and Earlier

7) **Startup/Cool Down**–There is a slight delay, cabinet temperature appears on display. Comp, ConFM, EvapFM, and MH energize. 2-hr defrost timer starts.

a) **EvapFM Diagnosis**: Confirm EvapFM energizes. If not, confirm doors are closed and DS engaged. Next, check for 115VAC at DSR #8 (LBU or GY) to DSR #7 (W). If 115VAC is not present, check DS continuity. If DS is engaged and contacts are open, replace DS. If 115VAC is present, check for 115VAC at DSR #4 (DBU) to neutral (W). If 115VAC is not present, check for 115VAC at DSR #6 (BK or W/BU) to neutral (W). If 115VAC is present at DSR #6 (BK or W/BU) to neutral (W) and not at DSR #4 (DBU) to neutral (W), replace DSR. If 115VAC is present at DSR #4 (DBU) to neutral (W), check EvapFM blades for binding and EvapFM continuity.

b) **Cabinet Light FGY (FGYCR and FGYCL) Diagnosis**: Open the door and confirm CLS is in the ON position. If not, move CLS to the ON position. CLS turns on. If CLS does not turn on, check for 115VAC at both CLS (BK) wires to neutral (W). If 115VAC is present at 1 CLS (BK) wire and not at the other, confirm power supply and continuity of CLS switch. If power supply is ok, check CLS continuity. If CLS is engaged and CLS switch is open, replace CLS. If CLS is engaged, contacts are closed, and 115VAC is present at CLS (BK) and CL is not energized, replace CL.
FS/HS CL Diagnosis: Open the door (upper on HS) and confirm CL is energized. If not, with the door open, check for 115VAC at DSR #5 (BK) to neutral (W) and DSR #1 (V or Y) to neutral (W). If 115VAC is not present at DSR #5 (BK), confirm power supply and continuity of power switch. If 115VAC is present at DSR #5 (BK) and not present at DSR #1 (V or Y), check DS continuity. If DS is disengaged and contacts are closed (DSR energized), replace DS. If DSR is de-energized and 115VAC is present at DSR #5 (BK) and not at DSR #1 (V or Y) to neutral (W), replace DSR. If 115VAC is present at DSR #1 (V or Y) and CL is not energized, replace CL.

c) **CM Diagnosis**: Cabinet temperature appears on display. If not, check for 115VAC at CM L2 (BK) to CM N3 neutral (W). If 115VAC is not present, check power switch, power cord connections, and breaker/fuse. Confirm wiring connections are secure for both CM L2 (BK) (power supply) and CM N3 (W) (neutral). If 115VAC is present and display is off, replace CM.

d) **Comp and ConFM Diagnosis**: Confirm Comp and ConFM energize. If not, check for 115VAC at CM C1 (R or V) to neutral (W). If 115VAC is not present, check CTh status. See "II.D.Thermistor Check." If CTh ohm reading is in proper range, replace CM. If 115VAC is present at CM C1 (R or V) to neutral (W), check for 115VAC at CR #0 (GY or P) to CR #1 (W). If 115VAC is not present, check continuity of HPS. If open, allow time for HPS to reset (cut out: 300±10 PSIG, cut in: 190±20 PSIG). If HPS does not reset, see "e) HPS Activation" below. If HPS is closed and 115VAC is present, check for 115VAC at CR #4 (BK) and CR #6 (R) to neutral (W). If 115VAC is present at CR #4 (BK) and not at CR #6 (R), replace CR. If 115VAC is present at CR #6 (R) to neutral (W) and ConFM is energized but Comp is not, give time for Comp internal protector to cool and reset. Next, check Comp start capacitor, start relay, and Comp motor windings. If Comp does not start, replace Comp. If ConFM is not energized, check ConFM fan blades for binding and motor winding continuity.

If Comp and ConFM are energized and the cabinet does not cool down, check for a restriction in the refrigeration circuit, correct TXV operation, and correct refrigerant charge.

e) **HPS Activation (cut out: 300±10 PSIG, cut in: 190±20 PSIG)**: Confirm ConFM is energized and fan blade turns freely. Confirm condenser coil is not clogged or restricted. Confirm there are no restrictions in the refrigeration circuit (TXV and drier). Let refrigeration circuit pressures equalize. If HPS does not reset and pressures are equalized, replace HPS. If pressures are not equalized, reclaim refrigerant and diagnose refrigeration circuit restriction.

8) **Cool Down Achieved**–CTh cools to 3°F (1.7°C) below setpoint. EvapFM continues. Comp and ConFM de-energize. **Diagnosis**: Confirm Comp and ConFM de-energize. If not, and Comp and ConFM were energized longer than 2 min., check CTh status. See "II.D. Thermistor Check." If CTh ohm reading is in range and Comp and ConFM continue longer than 2 min., check for 115VAC at CM C1 (R or V) to neutral (W). If 115VAC is present, replace CM. If 115VAC is not present and Comp and ConFM continue, check for 115VAC at CR #1 (R or V). If 115VAC is present, replace CR.

9) **Defrost**–Cabinet temperature is displayed during defrost. There is a 20-min. minimum defrost time, a 1-hr. maximum defrost time, and a 2-hr. minimum defrost interval.

1a) **Time-Initiated**: 2-hr. defrost timer terminates. EvapFM continues. Comp and ConFM de-energize.

1b) **Manually-Initiated**: To initiate a manual defrost, press the manual defrost button on display. Defrost icon turns on and, if energized, Comp and ConFM de-energize. Cabinet temperature is displayed during defrost.

2) **Defrost Termination**: DTh warms to 40°F (4.4°C). EvapFM and MH continue. Comp and ConFM energize.

Defrost Diagnosis:

1a) **Time-Initiation**: 2-hr. defrost timer terminates.

(1) **CM Diagnosis**: Confirm defrost icon turns on, "dEF" is displayed, and Comp icon turns off. If not, replace CM.

(2) **Comp and ConFM Diagnosis**: Confirm Comp and ConFM de-energize. If not, check for 115VAC at CM C1 (R or V) to neutral (W). If 115VAC is present, replace CM. If 115VAC is not present and Comp and ConFM continue, check CR #6 (R) to neutral (W). If 115VAC is present, replace CR.

1b) **Manual-Initiation**: After pressing the manual defrost button, check the following:

(1) **CM Diagnosis**: Confirm Comp icon turns off, defrost icon turns on, and "dEF" is displayed. If not, replace CM.

(2) **Comp and ConFM Diagnosis**: Confirm Comp and ConFM de-energize. If not, check for 115VAC at CM C1 (R or V) to neutral (W). If 115VAC is present, replace CM. If 115VAC is not present and Comp and ConFM continue, check CR #6 (R) to neutral (W). If 115VAC is present, replace CR.

2) **Defrost Temperature Termination**: DTh warms to 40°F (4.4°C). If not, confirm DTh status. See "II.D. Thermistor Check." If DTh is in proper range, have Comp and ConFM energized? If not, see "7d) Comp and ConFM Diagnosis" above.

Legend: **CL**–cabinet light; **CLS**–cabinet light switch (FGY); **CM**–control module; **Comp**–compressor; **ConFM**–condenser fan motor; **CR**–compressor relay; **CTh**–cabinet thermistor; **DS**–door switch (FS/HS); **DSR**–door switch relay (FS/HS); **DTh**–defrost thermistor; **EvapFM**–evaporator fan motors; **HPS**–high-pressure switch; **TXV**–thermostatic expansion valve

1b. Refrigerator: Auxiliary Code F-7 and Later

7) **Startup/Cool Down**–There is a slight delay, cabinet temperature appears on display. Comp, ConFM, EvapFM, and MH energize. 2-hr. defrost timer starts.

a) **EvapFM Diagnosis**: Confirm EvapFM energizes. If not, confirm doors are closed and DS engaged. Next, check for 115VAC at DSR #8 (GY) to #7 (W). If 115VAC is not present, check DS continuity. If DS is engaged and contacts are open, replace DS. If 115VAC is present, check for 115VAC at DSR #4 (DBU) to neutral (W). If 115VAC is not present, check for 115VAC at DSR #6 (W/BU) to neutral (W). If 115VAC is not present at DSR #6 (W/BU) to neutral (W) check for 115VAC at CM #5 (W/BU) to neutral (W). If 115VAC is not present at CM #5 (W/BU) to neutral (W), replace CM. If 115VAC is present at CM #5 (W/BU) to neutral (W) and not at DSR #6 (W/BU) to neutral (W), check wiring connections from CM to DSR. If 115VAC is present at DSR #6 (W/BU) to neutral (W) and not at DSR #4 (DBU) to neutral (W), replace DSR. If 115VAC is present at DSR #4 (DBU) to neutral (W) and EvapFM is not energized, check EvapFM blades for binding and EvapFM continuity.

b) **Cabinet Light FGE (FGECR & FGECL) Diagnosis**: Open the door and confirm CLS is in the ON position. If not, move CLS to the ON position. LEDs turn on. If LEDs do not turn on, check for 115VAC at CLS yellow (Y) wire to neutral (W) and CLS black (BK) wire to neutral (W). If 115VAC is present at CLS yellow (Y) wire and not at CLS black (BK) wire, confirm continuity of CLS switch. If CLS is engaged and CLS switch is open, replace CLS. If CLS is engaged, contacts are closed, and 115VAC is present at CLS black (BK) wire to neutral (W) and LEDs are not on, check for 24VDC at DCD black (BK) 24VDC wire to DCD red (R) 24VDC wire. If 24VDC is not present, check continuity of DCD driver. If open, replace DCD driver. If 24VDC is present and LEDs are not on, check wiring harness and wiring connections from DCD to LED. If connections are good and LEDs are not on, replace LEDs.
FS/HS CL Diagnosis: Open the door (upper on HS), confirm CL energizes. If not, check for 115VAC at DSR #5 (BK) to neutral (W) and DSR #1 (Y) to neutral (W). If 115VAC is not present at DSR #5 (BK), confirm power supply and continuity of power switch. If 115VAC is present at DSR #5 (BK) to neutral (W) and not present at DSR #1 (Y) to neutral (W), confirm DS is open (not engaged). If DS is disengaged and contacts are closed (DSR energized), replace DS. If DSR is de-energized and 115VAC is present at DSR #5 (BK) and not at DSR #1 (Y) to neutral (W), replace DSR. If 115VAC is present at DSR #1 (Y) and CL is not energized, replace CL.

c) **CM Diagnosis**: Cabinet temperature appears on display. If not, check for 115VAC at CM L2 (BK) to CM N3 neutral (W). If 115VAC is not present, check power switch, power cord connections, and breaker/fuse. Confirm wiring connections are secure for both CM L2 (BK) (power supply) and CM N3 (W) (neutral). If 115VAC is present and display is off, replace CM.

d) **Comp and ConFM Diagnosis**: Confirm Comp and ConFM energize. If not, check for 115VAC at CM C1 (R or V) to neutral (W). If 115VAC is not present, check CTh status. See "II.D.Thermistor Check." If CTh ohm reading is in proper range, replace CM. If 115VAC is present at CM C1 (R or V) to neutral (W), check for 115VAC at CR #0 (GY or P) to CR #1 (W). If 115VAC is not present, check continuity of HPS. If open, allow time for HPS to reset (cut out: 300±10 PSIG, cut in: 190±20 PSIG). If HPS does not reset, see "e) HPS Activation" below. If HPS is closed and 115VAC is present, check for 115VAC at CR #4 (BK) and CR #6 (R) to neutral (W). If 115VAC is present at CR #4 (BK) and not at CR #6 (R), replace CR. If 115VAC is present at CR #6 (R) to neutral (W) and ConFM is energized but Comp is not, give time for Comp external protector to cool and reset. Next, check Comp start capacitor, start relay, and Comp motor windings. If Comp does not start, replace Comp. If ConFM is not energized, check ConFM fan blades for binding and motor winding continuity.

If Comp and ConFM are energized and the cabinet does not cool down, check for a restriction in the refrigeration circuit, correct TXV operation, and correct refrigerant charge.

e) **HPS Activation (cut out: 300±10 PSIG, cut in: 190±20 PSIG)**: Confirm ConFM is energized and fan blade turns freely. Confirm condenser coil is not clogged or restricted. Confirm there are no restrictions in the refrigeration circuit (TXV and drier). Let refrigeration circuit pressures equalize. If HPS does not reset and pressures are equalized, replace HPS. If pressures are not equalized, reclaim refrigerant and diagnose refrigeration circuit restriction.

8) **Cool Down Achieved**–CTh cools to 3°F (1.7°C) below setpoint. EvapFM, Comp, and ConFM de-energize. **Diagnosis**: Confirm EvapFM, Comp, and ConFM de-energize. If not, and EvapFM, Comp, and ConFM were energized longer than 2 min., check CTh status. See "II.D. Thermistor Check." If CTh ohm reading is in range and EvapFM continues longer than 2 min., check for 115VAC at CM F5 (W/BU) to neutral (W). If 115VAC is present, replace CM. If Comp and ConFM continue longer than 2 min., and CTh ohm reading is in range, check for 115VAC at CM C1 (V) to neutral (W). If 115VAC is present, replace CM. If 115VAC is not present and Comp and ConFM continue, check for 115VAC at CR #6 (R). If 115VAC is present, replace CR.

9) **Defrost**–Cabinet temperature is displayed during defrost. There is a 20-min. minimum defrost time, a 1-hr. maximum defrost time, and a 2-hr. defrost interval.

1a) **Time-Initiated**: 2-hr. defrost timer terminates. Comp, ConFM, and EvapFM de-energize.

1b) **Manually-Initiated**: To initiate a manual defrost, press the manual defrost button on display. Defrost icon turns on and, if energized, Comp, ConFM, and EvapFM de-energize. Cabinet temperature is displayed during defrost.

2) **Defrost Termination**: DTh warms to 44°F (6.6°C). EvapFM, Comp, and ConFM energize.

Defrost Diagnosis:

1a) **Time-Initiation**: 2-hr. defrost timer terminates.

(1) **CM Diagnosis**: Confirm defrost icon turns on, "dEF" is displayed, and Comp and EvapFM icons turn off. If not, replace CM.

(2) **Comp and ConFM Diagnosis**: Confirm Comp and ConFM de-energize. If not, check for 115VAC at CM C1 (V) to neutral (W). If 115VAC is present, replace CM. If 115VAC is not present and Comp and ConFM continue, check CR #6 (R) to neutral (W). If 115VAC is present, replace CR.

(3) **EvapFM Diagnosis**: Confirm EvapFM de-energizes. If not, check for 115VAC at CM F5 (W/BU) to neutral (W). If 115VAC is present, replace CM.

1b) **Manual-Initiation**: After pressing the manual defrost button, check the following:

(1) **CM Diagnosis**: Confirm Comp and EvapFM icons turn off, defrost icon turns on, and "dEF" is displayed. If not, replace CM.

(2) **Comp and ConFM Diagnosis**: Confirm Comp and ConFM de-energize. If not, check for 115VAC at CM C1 (V) to neutral (W). If 115VAC is present, replace CM. If 115VAC is not present and Comp and ConFM continue, check CR #6 (R) to neutral (W). If 115VAC is present, replace CR.

(3) **EvapFM Diagnosis**: Confirm EvapFM de-energizes. If not, check for 115VAC at CM F5 (W/BU) to neutral (W). If 115VAC is present, replace CM.

2) **Defrost Temperature Termination**: DTh warms to 44°F (6.6°C)? If not, confirm DTh status. See "II.D. Thermistor Check." If DTh is in proper range, have Comp, ConFM, and EvapFM energized? If not, see "7a) EvapFM Diagnosis" or "7d) Comp and ConFM Diagnosis" above.

Legend: **CL**–cabinet light; **CLS**–cabinet light switch (FGE); **CM**–control module; **Comp**–compressor; **ConFM**–condenser fan motor; **CR**–compressor relay; **CTh**–cabinet thermistor; **DCD**–direct current driver; **DS**–door switch (FS/HS); **DSR**–door switch relay (FS/HS); **DTh**–defrost thermistor; **EvapFM**–evaporator fan motors; **HPS**–high-pressure switch; **TXV**–thermostatic expansion valve

2a. Freezer: Auxiliary Code F-7 and Earlier

7) **Startup/Cool Down**–Lights, DrH, MH, and PH energize. There is a slight delay, then Comp, ConFM, and EvapFM energize. Cabinet temperature appears on display and 4-hr. Comp cumulative run time defrost timer starts.

a) **Cabinet Light FGY (FGYCR & FGYCL) Diagnosis**: Open the door confirm CLS is in the ON position. If not, move CLS to the ON position. CLS turns on. If CLS does not turn on, check for 115VAC at both CLS (BK) wires to neutral (W). If 115VAC is present on 1 CLS (BK) wire and not the other, confirm power supply and continuity of CLS switch. If power supply is ok, check CLS continuity. If CLS is engaged and CLS switch is open, replace CLS. If CLS is engaged, contacts are closed, and 115VAC is present at CLS (BK) and CL is not energized, replace CL.
FS/HS CL: Diagnosis: Open the door (upper on HS) and confirm CL is energized. If not, with the door open, check for 115VAC at DSR #5 (BK) to neutral (W) and DSR #1 (V or Y) to neutral (W). If 115VAC is not present at DSR #5 (BK), confirm power supply and continuity of power switch. If 115VAC is present at DSR #5 (BK) and not present at DSR #1 (V or Y), check DS continuity. If DS is disengaged and contacts are closed (DSR energized), replace DS. If DSR is de-energized and 115VAC is present at DSR #5 (BK) and not at DSR #1 (V or Y) to neutral (W), replace DSR. If 115VAC is present at DSR #1 (V or Y) and CL is not energized, replace CL.

b) **DrH Diagnosis**: Confirm amp draw of DrH. If no amp draw available, check for 115VAC to DrH black wire (BK) to neutral (W). If 115VAC is present, check DrH continuity. If open, replace DrH. If 115VAC is not present, check wiring connections to DrH.

c) **MH and PH Diagnosis**: Confirm MH or PH energize. Check for 115VAC at MH or PH orange wire (O) to neutral (W). If 115VAC is not present, confirm power supply and continuity of power switch. If 115VAC is present, check amp draw of MH or PH. If an amp reading is not present, check continuity of MH or PH. If open, replace MH or PH.

d) **CM Diagnosis**: Cabinet temperature appears on display. If not, check for 115VAC at CM L2 (BK) to CM N3 neutral (W). If 115VAC is not present, confirm wiring connections are secure on CM L2 (BK) (power supply) and CM N3 (W) (neutral). If 115VAC is present and display is off, replace CM.

e) **EvapFM Diagnosis**: Confirm EvapFM energizes. If not, confirm doors are closed and DS engaged. Next, check for 115VAC at DSR #8 (LBU or GY) to DSR #7 neutral (W). If 115VAC is not present, check DS continuity. If DS is engaged and contacts are open, replace DS. If 115VAC is present, check for 115VAC at CM F5 (Y or W/BU) to neutral (W). If 115VAC is not present, replace CM. If 115VAC is present, check for 115VAC at DSR #4 (DBU) to neutral (W). If 115VAC is not present, check for 115VAC at DSR #6 (Y or W/BU) to neutral (W). If 115VAC is present at DSR #6 (Y or W/BU) to neutral (W) and not at DSR #4 (DBU) to neutral (W), replace DSR. If 115VAC is present at DSR #4 (DBU) to neutral (W), check EvapFM blades for binding and EvapFM continuity.

f) **Comp and ConFM Diagnosis**: Confirm Comp and ConFM energize. If not, check for 115VAC at CM C1 (R or V) to neutral (W). If 115VAC is not present, check CTh status. See "II.D.Thermistor Check." If CTh ohm reading is in proper range, replace CM. If not in range, replace DTh. If 115VAC is present at CM C1 (R or V) to neutral (W), check for 115VAC at CR #0 (GY or P) to CR #1 (W). If 115VAC is not present, check continuity of HPS. If open, allow time for HPS to reset (cut out: 490 ±10 PSIG, cut in: 370 ±20 PSIG). If HPS does not reset, see "g) HPS Activation" below. If HPS is closed and 115VAC is present, check for 115VAC at CR #4 (BK) and CR #6 (R) to neutral (W). If 115VAC is present at CR #4 (BK) and not at CR #6 (R), replace CR. If 115VAC is present at CR #6 (R) to neutral (W) and ConFM is energized but Comp is not: On 1-section; Give time for internal protector to cool and reset. Next, check run capacitor, start capacitor, start relay, and Comp motor windings. If Comp does not start, replace Comp. On 2-section; Check for 115VAC at Comp external protector to neutral (W). If 115VAC is not present, give time for Comp external protector to cool and reset. If Comp external protector does not reset, replace Comp external protector. If 115VAC is present, check run capacitor, start capacitor, start relay, and Comp motor windings. If ConFM is not energized, check ConFM fan blades for binding and motor winding continuity.

If Comp and ConFM are energized and the cabinet does not cool down, check for a restriction in the refrigeration circuit, correct TXV operation, and correct refrigerant charge. See nameplate for correct charge amount.

g) **HPS Activation (cut out: 490 ±10 PSIG, cut in: 370 ±20 PSIG)**: Confirm ConFM is energized and fan blade turns freely. Confirm condenser coil is not clogged or restricted. Confirm there are no restrictions in the refrigeration circuit (TXV and drier). Let refrigeration circuit pressures equalize. If HPS does not reset and pressures are equalized, replace HPS. If pressures are not equalized, reclaim refrigerant and diagnose refrigeration circuit restriction.

8) **Cool Down Achieved–**Lights, DrH, EvapFM, MH, and PH continue. CTh cools to 3°F (1.7°C) below setpoint. Comp and ConFM de-energize.

a) **Diagnosis**: Confirm Comp and ConFM de-energize. If not, and Comp and ConFM were energized longer than 2 min., check CTh status. See "II.D. Thermistor Check." If CTh ohm reading is in proper range:

b) **CM Diagnosis**: Check for 115VAC at CM C1 (R or V) to neutral (W). If 115VAC is present, replace CM.

c) **Comp and ConFM Diagnosis**: Check CR #6 (R) to neutral (W). If 115VAC is present, replace CR.

9) **Defrost**–The defrost icon turns on and "dEF" is displayed during defrost. There is a 5-min. minimum defrost time and a 1-hr. maximum defrost time.

1a) **Time-Initiated**: 4-hr. cumulative Comp run time defrost timer starts. Once 4-hr. cumulative Comp run time defrost timer terminates (Comp energized more than 4 hrs.).

1b) **Manually-Initiated**: To initiate a manual defrost, press the manual defrost button on display.

Defrost icon turns on and "dEF" is displayed. DH energizes. If on, Comp and EvapFM icons turn off. Comp and EvapFM icons turn off, Comp, ConFM, and EvapFM de-energize.

2a) **Time-Initiated Defrost-Termination**:

(1) DTh warms to 59°F (15°C). Defrost icon and "dEF" continue. DH de-energizes. 3-min. Comp delay timer starts, 7-min. EvapFM delay timer starts, and 18-min. temperature display delay timer starts.

(2) 3-min. Comp delay timer terminates. "dEF" continues. Defrost icon turns off and Comp icon turns on and Comp and ConFM energize.

(3) 4 min. later, 7-min. EvapFM delay timer terminates. Comp, ConFM, and "dEF" continue. EvapFM icon turns on and EvapFM energizes. Note that the 7-min. EvapFM delay time is a maximum; if the defrost thermistor cools to 25°F (-3.9°C) before the 7-min. EvapFM delay timer terminates, EvapFM icon turns on and EvapFM energizes.

(4) 11-min. later, 18-min. temperature display delay timer terminates. "dEF" is replaced by cabinet temperature.

2b) **Manually-Initiated Defrost-Termination**:

(1) DTh warms to 59°F (15°C). Defrost icon and "dEF" continue. DH de-energizes. 3-min. Comp, ConFM, and EvapFM delay timer starts, and 15-min. temperature display delay timer starts.

(2) 3-min. Comp, ConFM, and EvapFM delay timer terminates. "dEF," Defrost icon turns off, Comp and EvapFM icons turn on, and Comp, ConFM, and EvapFM energize.

(3) 12-min. later, 15 min. temperature display timer terminates. "dEF" is replaced by cabinet temperature.

Defrost Diagnosis:

1) **Time-Initiation or Manual Initiation**: 4-hr. Comp cumulative run time defrost timer terminates or CM defrost button pressed.

(1) **CM Diagnosis**: Confirm defrost icon turns on, "dEF" is displayed, and Comp and EvapFM icons turn off. If not, replace CM. Next, check that CM C1 (R or V) and CM F5 (Y or W/BU) do not have 115VAC to neutral (W). If 115VAC is present, replace CM. Check for 115VAC at CM H4 (O) to neutral (W). If 115VAC is not present, replace CM.

(2) **DH Diagnosis**: Confirm DH energizes (amp draw). If not, check for 115VAC at DT (BK) to neutral (W). If 115VAC is not present, check DT continuity. If open, let cool and reset. If DT does not close, replace DT. If DT is closed, check DH amp draw and continuity.

(3) **Comp and ConFM Diagnosis**: Confirm Comp and ConFM de-energize. If not, check for 115VAC at CR #6 (R) to neutral (W). If 115VAC is present, replace CR.

(4) **EvapFM Diagnosis**: Confirm EvapFM de-energizes. If not, check for 115VAC at DSR 4 (DBU) to neutral (W). If 115VAC is present, replace DSR.

2a) **Time-Initiated Defrost-Termination**: DTh warms to 59°F (15°C). If not, confirm DTh status. See "II.D. Thermistor Check." If DTh is in proper range, DH de-energizes and 3 delay timers start. If DTh has not warmed to 59°F (15°C), check DT and DH continuity. Next, check DH amp draw.

(1) **3-min. Comp delay timer terminates**: 3 min. after DH de-energizes, confirm defrost icon turns off, Comp icon turns on, and Comp and ConFM energize. If not, confirm cabinet temperature is warm enough for Comp and ConFM operation. Next, check for 115VAC at CM C1 (R or V) to neutral (W). If 115VAC is not present, check CTh status. See "II.D.Thermistor Check." If CTh ohm reading is in proper range, replace CM. If 115VAC is present, check for 115VAC at CR #4 (BK) to neutral (W) and CR #6 (R) to neutral (W). If 115VAC is present at CR #4 (BK) to neutral (W) but not at CR #6 (R) to neutral (W), replace CR. If 115VAC is present at CR #6 (R) and Comp or ConFM are not energized, check Comp start components, Comp protector (internal on 1-section, external on 2-section), and Comp motor winding continuity. If ConFM is not energized, check ConFM fan blades for binding and motor winding continuity.

(2) **7-min. EvapFM delay timer terminates**: (note that the 7-min. EvapFM delay time is a maximum; if the defrost thermistor cools to 25°F (-3.9°C) before the 7-min. EvapFM delay timer terminates, EvapFM icon turns on and EvapFM energizes): 4 min. after Comp and ConFM energize, confirm EvapFM icon turns on and EvapFM energizes. If not, confirm doors are closed and DS engaged. Next, check for 115VAC at CM F5 (Y or W/BU) to neutral (W). If 115VAC is not present, replace CM. If 115VAC is present, check for 115VAC at DSR #4 (DBU) to neutral (W). If 115VAC is not present, check for 115VAC at DSR #6 (Y or W/BU) to neutral (W). If 115VAC is present on DSR #6 (Y or W/BU) to neutral (W) and not on DSR #4 (DBU) to neutral (W), replace DSR. If 115VAC is present on DSR #4 (DBU) to neutral (W) and EvapFM is not energized, check EvapFM blades for binding and EvapFM continuity.

(3) **18-min. temperature display delay timer terminates**: 11 min. after EvapFM energizes, "dEF" is replaced by cabinet temperature on display. If not, replace CM.

2b) **Manually-Initiated Defrost-Termination**: DTh warmes to 59°F (15°C). If not, confirm DTh status. See "II.D. Thermistor Check." If DTh is in proper range, DH de-energizes and 2 delay timers start. If DTh has not warmed to 59°F (15°C), check DT and DH continuity. Next, check DH amp draw.

(1) **3-min. Comp/ConFM and EvapFM delay timers terminate**: 3 min. after DH de-energizes, confirm defrost icon turns off, Comp and EvapFM icons turn on, and Comp, ConFM, and EvapFM energize. If not, confirm cabinet temperature is warm enough for Comp and ConFM operation.

Comp and ConFM: Check for 115VAC at CM C1 (R or V) to neutral (W). If 115VAC is not present, check CTh status. See "II.D.Thermistor Check." If CTh ohm reading is in proper range, replace CM. If 115VAC is present, check for 115VAC at CR #4 (BK) to neutral (W) and CR #6 (R) to neutral (W). If 115VAC is present at CR #4 (BK) to neutral (W) but not at CR #6 (R) to neutral (W), replace CR. If 115VAC is present at CR #6 (R) and Comp or ConFM are not energized, check Comp start components, Comp protector (internal on 1-section, external on 2-section), and Comp motor winding continuity. If ConFM is not energized, check ConFM fan blades for binding and motor winding continuity.

EvapFM: Confirm EvapFM icon turns on and EvapFM energizes. If not, confirm doors are closed and DS engaged. Next, check for 115VAC at CM F5 (Y or W/BU) to neutral (W). If 115VAC is not present, replace CM. If 115VAC is present, check for 115VAC at DSR #4 (DBU) to neutral (W). If 115VAC is not present, check for 115VAC at DSR #6 (Y or W/BU) to neutral (W). If 115VAC is present on DSR #6 (Y or W/BU) to neutral (W) and not on DSR #4 (DBU) to neutral (W), replace DSR. If 115VAC is present on DSR #4 (DBU) to neutral (W) and EvapFM is not energized, check EvapFM blades for binding and EvapFM continuity.

(2) **15-min. temperature display delay timer terminates**: 12 min. after Comp, ConFM, and EvapFM energize, "dEF" is replaced by cabinet temperature on display. If not, replace CM.

Legend: **CL**–cabinet light; **CLS**–cabinet light switch; **CM**–control module; **Comp**–compressor; **ConFM**–condenser fan motor; **CR**–compressor relay; **CTh**–cabinet thermistor; **DCD**–direct current driver; **DH**–defrost heater; **DrH**–drain heater; **DSR**–door switch relay; **DT**–defrost thermostat; **DTh**–defrost thermistor; **EvapFM**–evaporator fan motors; **HPS**–high-pressure switch; **MH**–mullion heater; **PH**–perimeter heater; **TXV**–thermostatic expansion valve

2b. Freezer: Auxiliary Code F-8 and Later

7) **Startup/Cool Down**–Lights and DrH energize. There is a slight delay, then Comp, ConFM, EvapFM, MH, and PH energize. Cabinet temperature appears on display and 5-hr. Comp cumulative run time defrost timer starts.

a) **Cabinet Light FGE (FGECR & FGECL) Diagnosis**: Open the door confirm CLS is in the ON position. If not, move CLS to the ON position.
LEDs turn on. If LEDs do not turn on, check for 115VAC at CLS yellow (Y) wire to neutral (W) and CLS black (BK) wire to neutral (W). If 115VAC is present at CLS yellow (Y) wire and not at CLS black (BK) wire, confirm continuity of CLS switch. If CLS is engaged and CLS switch is open, replace CLS. If CLS is engaged, contacts are closed, and 115VAC is present at CLS black (BK) wire to neutral (W) and LEDs are not on, check for 24VDC at DCD output black (BK) wire to DCD output red (R) wire. If 24VDC is not present, check continuity of DCD driver. If open, replace DCD driver. If 24VDC is present and LEDs are not on, check wire harness and wiring connections from DCD to LED. If connections are good and LEDs are not on, replace LED.
FS/HS CL Diagnosis: Open the door (upper on HS) and confirm CL is energized. If not, with the door open, check for 115VAC at DSR #5 (BK) to neutral (W) and DSR #1 (Y) to neutral (W). If 115VAC is not present at DSR #5 (BK), confirm power supply and continuity of power switch. If 115VAC is present at DSR #5 (BK) and not present at DSR #1 (Y), check DS continuity. If DS is disengaged and contacts are closed (DSR energized), replace DS. If DSR is de-energized and 115VAC is present at DSR #5 (BK) and not at DSR #1 (Y) to neutral (W), replace DSR.
If 115VAC is present at DSR #1 (Y) and CL is not energized, replace CL.

b) **DrH Diagnosis**: Confirm amp draw of DrH. If no amp draw available, check for 115VAC to DrH black wire (BK) to neutral (W). If 115VAC is present, check DrH continuity. If open, replace DrH. If 115VAC is not present, check wiring connections to DrH.

c) **CM Diagnosis**: Cabinet temperature appears on display. If not, check for 115VAC at CM L2 (BK) to CM N3 neutral (W). If 115VAC is not present, confirm wiring connections are secure on CM L2 (BK) (power supply) and CM N3 (W) (neutral). If 115VAC is present and display is off, replace CM.

d) **Comp and ConFM Diagnosis**: Confirm Comp and ConFM energize. If not, check for 115VAC at CM C1 (V) to neutral (W). If 115VAC is not present, check CTh status. See "II.D.Thermistor Check." If CTh ohm reading is in proper range, replace CM. If not in range, replace thermistor. If 115VAC is present at CM C1 (V) to neutral (W), check for 115VAC at CR #0 (P) to CR #1 (W). If 115VAC is not present, check continuity of HPS. If open, allow time for HPS to reset (cut out: 490 ±10 PSIG, cut in: 370 ±20 PSIG). If HPS does not reset, see "g) HPS Activation" below. If HPS is closed and 115VAC is present, check for 115VAC at CR #4 (BK) and CR #6 (R) to neutral (W). If 115VAC is present at CR #4 (BK) and not at CR #6 (R), replace CR. If 115VAC is present at CR #6 (R) to neutral (W) and ConFM is energized but Comp is not: On 1-section; Give time for internal protector to cool and reset. Next, check run capacitor, start capacitor, start relay, and Comp motor windings. If Comp does not start, replace Comp. On 2-section; Check for 115VAC at Comp external protector to neutral (W). If 115VAC is not present, give time for Comp external protector to cool and reset.

If Comp external protector does not reset, replace Comp external protector. If 115VAC is present, check run capacitor, start capacitor, start relay, and Comp motor windings. If ConFM is not energized, check ConFM fan blades for binding and motor winding continuity.

If Comp and ConFM are energized and the cabinet does not cool down, check for a restriction in the refrigeration circuit, correct TXV operation, and correct refrigerant charge. See nameplate for correct charge amount.

e) **EvapFM Diagnosis**: Confirm EvapFM energizes. If not, confirm doors are closed and DS engaged. Next, check for 115VAC at DSR #8 (GY) to DSR #7 neutral (W). If 115VAC is not present, check DS continuity. If DS is engaged and contacts are open, replace DS. If 115VAC is present, check for 115VAC at CM F5 (W/BU) to neutral (W). If 115VAC is not present, replace CM. If 115VAC is present, check for 115VAC at DSR #4 (DBU) to neutral (W). If 115VAC is not present, check for 115VAC at DSR #6 (Y or W/BU) to neutral (W). If 115VAC is present at DSR #6 (W/BU) to neutral (W) and not at DSR #4 (DBU) to neutral (W), replace DSR. If 115VAC is present at DSR #4 (DBU) to neutral (W), check EvapFM blades for binding and EvapFM continuity.

f) **MH and PH Diagnosis**: Confirm MH and PH energize. If not, check for 115VAC at CM C1 (V) to neutral (W). If 115VAC is not present, check CTh status. See "II.D.Thermistor Check." If CTh ohm reading is in proper range, replace CM. If 115VAC is present at CM C1 (V) to neutral (W), check for 115VAC at CR #0 (P) to CR #1 (W). If 115VAC is not present, check continuity of HPS. If open, allow time for HPS to reset (cut out: 490 ±10 PSIG, cut in: 370 ±20 PSIG). If HPS does not reset, see "g) HPS Activation" below. If HPS is closed and 115VAC is present, check amp draw of MH and PH. If an amp reading is not present, check continuity of MH or PH. If open, replace MH or PH.

g) **HPS Activation (cut out: 490 ±10 PSIG, cut in: 370 ±20 PSIG)**: Confirm ConFM is energized and fan blade turns freely. Confirm condenser coil is not clogged or restricted. Confirm there are no restrictions in the refrigeration circuit (TXV and drier). Let refrigeration circuit pressures equalize. If HPS does not reset and pressures are equalized, replace HPS. If pressures are not equalized, reclaim refrigerant and diagnose refrigeration circuit restriction.

8) **Cool Down Achieved**–DrH continues. CTh cools to 3°F (1.7°C) below setpoint. Comp, ConFM, EvapFM, MH, and PH de-energize.

a) **Diagnosis**: Confirm Comp, ConFM, EvapFM, MH, and PH de-energize. If not, and EvapFM, Comp, and ConFM were energized longer than 2 min., check CTh status. See "II.D. Thermistor Check." If CTh ohm reading is in proper range:

b) **CM Diagnosis**: Check for 115VAC at CM C1 (V) to neutral (W) and CM F5 (W/BU) to neutral (W). If 115VAC is present on either CM C1 or CM F5, replace CM.

c) **Comp and ConFM Diagnosis**: Check for 115VAC at CR #6 (R) to neutral (W). If 115VAC is present, replace CR.

9) **Defrost**–The defrost icon turns on and "dEF" is displayed during defrost. There is a 5-min. minimum defrost time and a 1-hr. maximum defrost time.

1a) **Time-Initiated**: 5-hr. cumulative Comp run time defrost timer starts. Once 5-hr. cumulative Comp run time defrost timer terminates (Comp energized more than 5 hrs.).

1b) **Manually-Initiated**: To initiate a manual defrost, press the manual defrost button on display.

Defrost icon turns on and "dEF" is displayed. DH energizes. If on, Comp and EvapFM icons turn off. Comp, ConFM, EvapFM, MH, and PH de-energize.

2a) **Time-Initiated Defrost-Termination**:

(1) DTh warms to 45°F (7.2°C). Defrost icon and "dEF" continues. DH de-energizes. 3-min. Comp delay timer starts, 7-min. EvapFM delay timer starts, and 18-min. temperature display delay timer starts.

(2) 3-min. Comp delay timer terminates. "dEF" continues. Defrost icon turns off and Comp icon turns on. Comp, ConFM, MH, and PH energize.

(3) 4 min. later, 7-min. EvapFM delay timer terminates. Comp, ConFM, "dEF," MH, and PH continue. EvapFM icon turns on and EvapFM energizes. Note that the 7-min. EvapFM delay time is a maximum; if the defrost thermistor cools to 25°F (-3.9°C) before the 7-min. EvapFM delay timer terminates, EvapFM icon turns on and EvapFM energizes.

(4) 11-min. later, 18-min. temperature display delay timer terminates. "dEF" is replaced by cabinet temperature.

2b) **Manually-Initiated Defrost-Termination**:

(1) DTh warms to 45°F (7.2°C). Defrost icon and "dEF" continue. DH de-energizes. 3-min. Comp and EvapFM delay timer starts, and 15-min. temperature display delay timer starts.

(2) 3-min. Comp delay timer terminates. "dEF" continues. Defrost icon turns off, Comp and EvapFM icons turn on, and Comp, ConFM, EvapFM, MH, and PH energize.

(3) 12-min. later, 15 min. temperature display timer terminates. "dEF" is replaced by cabinet temperature.

Defrost Diagnosis:

1) **Time-Initiation or Manual Initiation**: 5-hr. Comp cumulative run time defrost timer terminates or CM defrost button pressed.

(1) **CM Diagnosis**: Confirm defrost icon turns on, "dEF" is displayed, and Comp and EvapFM icons turn off. If not, replace CM. Next, check that CM C1 (V) and CM F5 (W/BU) do not have 115VAC to neutral (W). If 115VAC is present, replace CM. Check for 115VAC at CM H4 (O) to neutral (W). If 115VAC is not present, replace CM.

(2) **DH Diagnosis**: Confirm DH energizes (amp draw). If not, check for 115VAC at DT (BK) to neutral (W). If 115VAC is not present, check DT continuity. If open, let cool and reset. If DT does not close, replace DT. If DT is closed, check DH amp draw and continuity.

(3) **Comp and ConFM Diagnosis**: Confirm Comp and ConFM de-energize. If not, check for 115VAC at CR #6 (R) to neutral (W). If 115VAC is present, replace CR.

(4) **EvapFM Diagnosis**: Confirm EvapFM de-energizes. If not, check for 115VAC at DSR 4 (DBU) to neutral (W). If 115VAC is present, replace DSR.

2a) **Time-Initiated Defrost-Termination**: DTh warmes to 45°F (7.2°C). If not, confirm DTh status. See "II.D. Thermistor Check." If DTh is in proper range, DH de-energizes and 3 delay timers start. If DTh has not warmed to 45°F (7.2°C), check DT and DH continuity. Next, check DH amp draw.

(1) **3-min. Comp delay timer terminates**: 3 min. after DH de-energizes, confirm defrost icon turns off, Comp icon turns on, and Comp, ConFM, MH, and PH energize. If not, confirm cabinet temperature is warm enough for Comp operation. Next, check for 115VAC at CM C1 (V) to neutral (W). If 115VAC is not present, check CTh status. See "II.D.Thermistor Check." If CTh ohm reading is in proper range, replace CM. If 115VAC is present:

MH and PH Diagnosis: If MH and PH are de-energized, check for 115VAC at CR 0 (P and O). If 115VAC is present at CM C1 (V) to neutral (W) and not at CR 0 (P and O), check HPS continuity. See "f) HPS Activation" above.

Comp and ConFM Diagnosis: Check for 115VAC at CR 0 (P and O). If 115VAC is present at CM C1 (V) to neutral (W) and not at CR 0 (P and O), check HPS continuity. See "f) HPS Activation" above. If 115VAC is present at CR 0 (P and O) to neutral (W), check for 115VAC at CR #4 (BK) to neutral (W) and CR #6 (R) to neutral (W). If 115VAC is present at CR #4 (BK) to neutral (W) but not at CR #6 (R) to neutral (W), replace CR. If 115VAC is present at CR #6 (R) and Comp or ConFM are not energized, check Comp start components, Comp protector (internal on 1-section, external on 2-section), and Comp motor winding continuity. If ConFM is not energized, check ConFM fan blades for binding and motor winding continuity.

(2) **7-min. EvapFM delay timer terminates**: (note that the 7-min. EvapFM delay time is a maximum; if the defrost thermistor cools to 25°F (-3.9°C) before the 7-min. EvapFM delay timer terminates, EvapFM icon turns on and EvapFM energizes): 4 min. after Comp energizes, confirm EvapFM icon turns on and EvapFM energizes. If not, confirm doors are closed and DS engaged. Next, check for 115VAC at CM F5 (W/BU) to neutral (W). If 115VAC is not present, replace CM. If 115VAC is present, check for 115VAC at DSR #4 (DBU) to neutral (W). If 115VAC is not present, check for 115VAC at DSR #6 (Y or W/BU) to neutral (W). If 115VAC is present on DSR #6 (W/BU) to neutral (W) and not on DSR #4 (DBU) to neutral (W), replace DSR. If 115VAC is present on DSR #4 (DBU) to neutral (W) and EvapFM is not energized, check EvapFM blades for binding and EvapFM continuity.

(3) **18-min. temperature display delay timer terminates**: 11 min. after EvapFM energizes, "dEF" is replaced by cabinet temperature on display. If not, replace CM.

2b) **Manually-Initiated Defrost-Termination**: Has DTh warmed to 45°F (7.2°C)? If not, confirm DTh status. See "II.D. Thermistor Check." If DTh is in proper range, DH de-energizes and 2 delay timers start. If DTh has not warmed to 45°F (7.2°C), check DT and DH continuity. Next, check DH amp draw.

(1) **3-min. Comp and EvapFM delay timers terminate**: 3 min. after DH de-energizes, confirm defrost icon turns off, Comp and EvapFM icons turn on, and Comp, ConFM, EvapFM, MH, and PH energize. If not, confirm cabinet temperature is warm enough for Comp and ConFM operation.

CM and Defrost Thermistor Diagnosis: Check for 115VAC at CM C1 (V) to neutral (W). If 115VAC is not present, check CTh status. See "II.D.Thermistor Check." If CTh ohm reading is in proper range, replace CM.

MH and PH Diagnosis: Check for 115VAC at CR 0 (P and O) to neutral (W). If 115VAC is not present, check HPS continuity. See "f) HPS Activation" above.

Comp and ConFM: Check for 115VAC at CR 0 (P and O) to neutral (W). If 115VAC is not present, check HPS continuity. See "f) HPS Activation" above. If 115VAC is present, check for 115VAC at CR #4 (BK) to neutral (W) and CR #6 (R) to neutral (W). If 115VAC is present at CR #4 (BK) to neutral (W) but not at CR #6 (R) to neutral (W), replace CR. If 115VAC is present at CR #6 (R) and Comp or ConFM are not energized, check Comp start components, Comp protector (internal on 1-section, external on 2-section), and Comp motor winding continuity. If ConFM is not energized, check ConFM fan blades for binding and motor winding continuity.

EvapFM: Confirm EvapFM icon turns on and EvapFM energizes. If not, confirm doors are closed and DS engaged. Next, check for 115VAC at CM F5 (W/BU) to neutral (W). If 115VAC is not present, replace CM. If 115VAC is present, check for 115VAC at DSR #4 (DBU) to neutral (W). If 115VAC is not present, check for 115VAC at DSR #6 (W/BU) to neutral (W). If 115VAC is present on DSR #6 (W/BU) to neutral (W) and not on DSR #4 (DBU) to neutral (W), replace DSR. If 115VAC is present on DSR #4 (DBU) to neutral (W) and EvapFM is not energized, check EvapFM blades for binding and EvapFM continuity.

(2) **15-min. temperature display delay timer terminates**: 12 min. after Comp, ConFM, and EvapFM energize, "dEF" is replaced by cabinet temperature on display. If not, replace CM.

Legend: **CL**–cabinet light; **CLS**–cabinet light switch; **CM**–control module; **Comp**–compressor; **ConFM**–condenser fan motor; **CR**–compressor relay; **CTh**–cabinet thermistor; **DCD**–direct current driver; **DH**–defrost heater; **DrH**–drain heater; **DSR**–door switch relay; **DT**–defrost thermostat; **DTh**–defrost thermistor; **EvapFM**–evaporator fan motors; **HPS**–high-pressure switch; **MH**–mullion heater; **PH**–perimeter heater; **TXV**–thermostatic expansion valve

C. Control Module Check

1. Control Module Display

Before replacing CM that does not show a visible defect and that you suspect is bad, conduct the following check procedure. This procedure will help you verify your diagnosis. Always choose a neutral (W) to establish a good neutral connection when checking high voltages. Also, confirm there is a good power supply and neutral connection to CM: 115VAC at CM L2 (BK) to CM N3 (W).

Alarm Reset: To silence the alarm, press and release the up button with power on. For alarm information, see "III.D. Alarm Safeties."

2. Startup/Cool Down

1) Check all wiring connections. Confirm the CTh and DTh are properly connected.
2) Move the power switch to the "ON" position.
3) Check for 115VAC at CM L2 (BK) to CM N3 neutral (W). If 115VAC is not present, check power supply, wire connections, and power switch.
4) Check that cabinet temperature is displayed. If not, replace CM.
5) Check that EvapFM is energized from CM F5 (Y or W/BU) (except refrigerator F-6 and earlier). Make sure doors are closed and DS engaged. Next, check for 115VAC at CM F5 (Y or W/BU) to neutral (W). If 115VAC is not present, replace CM.
6) Check that Comp and ConFM energize (MH and PH on Freezer F-8 and later). If not, check CTh status. See "II.D.Thermistor Check." If CTh ohm reading is in proper range, check for 115VAC at CM C1 (R or V) to neutral (W). If 115VAC is not present, replace CM.

3. Defrost Initiation

7) **Manual Defrost Check**: Press the manual defrost button briefly. If on, Comp and EvapFM (except refrigerator F-6 and earlier) icons turn off. Defrost icon turns on and "dEF" is displayed.
8) Confirm Comp, ConFM, EvapFM (F-7 and later and freezers), MH, and PH (freezers F-8 and later) de-energize (EvapFM continues on refrigerator F-6 and earlier). Check for 115VAC at CM C1 (R or V) to neutral (W) for Comp, ConFM, and MH, and PH (freezers F-8 and later) then at CM F5 (Y or W/BU) to neutral (W) for EvapFM (refrigerator F-7 and later and freezers). If "dEF" is displayed and 115VAC is present, replace CM.
9) Freezers: Confirm DH energizes. Check for 115VAC at CM H4 (O) to neutral (W). If "dEF" is displayed and 115VAC is not present, replace CM.

4. Defrost Termination

10) Check that the components restart after defrost termination.

Refrigerator:

a) **Auxiliary Code F-6 and Earlier**: DTh reaches 40°F (4.4°C) Comp and ConFM (CM C1 (R or V)) energize. If not, check DTh status. See "II.D.Thermistor Check." If DTh ohm reading is in proper range, and components do not energize, check for 115VAC at CM C1 (R or V) to neutral (W). If 115VAC is not present, replace CM. If 115VAC is present, check component continuity and replace as needed.

b) **Auxiliary Code F-7 and Later**: DTh reaches 44°F (6.6°C), Comp and ConFM (CM C1 (V)), and EvapFM (CM F5 (W/BU)) energize. If not, check DTh status. See "II.D.Thermistor Check." If DTh ohm reading is in proper range, and components do not energize, check for 115VAC at CM C1 (V) and CM F5 (W/BU) to neutral (W). If 115VAC is not present, replace CM. If 115VAC is present, check component continuity and replace as needed.

Freezer:

a) **Auxiliary Code F-7 and Earlier**: DTh reaches 59°F (15°C) or 45°F (7.2°C). 3-min. later, Comp and ConFM (CM C1 (R or V)) and EvapFM (CM F5 (Y or W/BU)) energize. If not, check DTh status. See "II.D.Thermistor Check." If DTh ohm reading is in proper range, and Comp, ConFM, or EvapFM do not energize, replace CM. 12 min. after Comp, ConFM, and EvapFM energize, cabinet temperature appears on CM. If components fail to start, check continuity, replace as needed.

b) **Auxiliary Code F-8 and Later**: DTh reaches 45°F (7.2°C). 3-min. later, Comp and ConFM (CM C1 (V)) and EvapFM (CM F5 (W/BU)) energize. If not, check DTh status. See "II.D.Thermistor Check." If DTh ohm reading is in proper range, and Comp and ConFM (CM C1 (V)), or EvapFM (CM F5 (W/BU)) do not energize, replace CM. 12 min. after Comp, ConFM, and EvapFM energize, cabinet temperature appears on CM. If components fail to start, check continuity, replace as needed.

Legend: **CM**–control module; **Comp**–compressor; **ConFM**–condenser fan motor; **CTh**–cabinet thermistor; **DH**–defrost heater; **DS**–door switch; **DTh**–defrost thermistor; **EvapFM**–evaporator fan motors, **MH**–mullion heater; **PH**–perimeter heater

D. Thermistor Check

The cabinet thermistor is used for cabinet temperature control and the defrost thermistor is used for defrost cycle initiation and termination. Thermistor resistance varies depending on temperature. The control module monitors the thermistors to control system operation. No adjustment is required.

In the event the cabinet thermistor reading is out of range (E1 alarm), the compressor operates on a fixed time basis of 5-min. on and 5-min. off.

In the event the refrigerator defrost thermistor reading is out of range (E2 alarm), defrost initiation occurs every 4-hr. of cumulative compressor run time and terminates on 20-min. minimum defrost timer.

In the event the freezer defrost thermistor reading is out of range (E2 alarm), defrost initiation occurs every 4-hr. of cumulative compressor run time and terminates based on cabinet thermistor temperature.

To check thermistor resistance, follow the steps below.

1) Move the power switch to the "OFF" position, then unplug the appliance from the electrical outlet.
2) Remove the control box cover.
3) Disconnect and remove the thermistor in question.
4) Immerse the thermistor sensor portion in a glass containing ice and water for 2 to 3 min.
5) Check the resistance between the wires at the thermistor connector. Normal reading is within 16.0 to 16.7 kΩ. If outside the normal reading, replace the thermistor.
6) Reconnect and replace the thermistor in its correct position. See "IV.B. Important Notes for Component Replacement."
7) Plug the appliance back into the electrical outlet. Move the power switch to the "ON" position.

E. Diagnostic Tables

Check for correct appliance installation per the instruction manual and proper voltage per appliance nameplate.

1. Not Cooling

Not Cooling - Possible Cause	
1. Power Supply	a) Unplugged, off, blown fuse, tripped or defective circuit breaker. On three-section receptacle box, only top receptacles have power.
	b) Loose connection.
	c) Not within specifications.
2. Cord and Plug On three-section model, check receptacle box cord and plug and one-section and two-section cords and plugs.	a) Loose connection.
	b) Defective.
3. Power Switch (control box)	a) "OFF" position.
	b) Defective.
4. Wiring	a) Loose connection.
	b) Faulty.
5. Control Module See "III.D. Alarm Safeties" and "II.C. Control Module Check."	a) In alarm.
	b) Defective.
6. Door Switch	a) Not engaged.
	b) Defective.
7. Door Switch Relay	a) Loose connection.
	b) Defective.
8. Evaporator Fan Motor	a) Defective.
9. High-Pressure Switch (Refrigerator: Cut-out: 300±10 PSIG, Cut-In: 190±20 PSIG Freezer: Cut-out: 490±10 PSIG Cut-in: 370±20 PSIG)	a) Dirty condenser.
	b) Ambient temperature too warm.
	c) Condenser fan motor not operating.
	d) Refrigerant overcharge.
	e) Refrigerant lines or components restricted.
	f) Defective.
10. Compressor Relay	a) Defective.
11. Compressor External Protector (CF2S-XX only)	a) Dirty condenser.
	b) Condenser fan motor not operating.
	c) Compressor capacitor or start relay defective.
	d) Defective.
12. Compressor	a) Defective.
13. Condenser	a) Dirty.
14. Evaporator See "2. Evaporator Frozen Up."	a) Clogged or frozen.
15. Refrigerant/Refrigerant Lines	a) Refrigerant leak.
	b) Refrigerant lines restricted.

2. Evaporator Frozen Up

Evaporator Frozen Up - Possible Cause	
1. Evaporator	a) Dirty.
2. Evaporator Fan Motor	a) Fan blades binding.
	b) Defective.
3. Defrost Thermistor	a) Out of position or defective.
4. Control Module	a) Defective.
5. Compressor Relay	a) Defective.
6. Refrigerant Charge/Refrigerant Lines	a) Low.
	b) Component restriction (TXV, cap tube, drier).
7. Defrost Heater (freezer)	a) Defective.

3. Defrost

Refrigerator Defrost Fails to Initiate - Possible Cause	
1. Control Module (2-hr. defrost timer)	a) Defective.
Refrigerator Defrost Fails to Terminate - Possible Cause	
1. Defrost Thermistor (Confirm DTh status. See "II.D. Thermistor Check.")	a) Defrost termination temperature 40°F (4.7°C) F-6 and Earlier or 44°F (6.6°C) F-7 and Later not achieved.
	b) Defective.
2. Control Module	a) Defrost thermistor connection loose.
	b) Defective.
3. Compressor Relay	a) Defective.
Freezer Defrost Fails to Initiate - Possible Cause	
1. 4-hr. (Auxiliary Code F-7 and earlier) or 5-hr. (Auxiliary Code: F-8 and later) compressor cumulative run time defrost timer terminated.	a) Check compressor operation. See "1. Not Cooling."
2. Control Module	a) Defective.
3. Defrost Thermostat	a) Open. Cut-out: 120°F±5°F (49°C±3°C), Cut-in: 70°F±5°F (21C±3°C)
Freezer Defrost Fails to Terminate - Possible Cause	
1. Defrost Heater	a) Defrost thermostat open.
	b) Defective.
2. Defrost Thermistor (Confirm DTh status. See "II.D. Thermistor Check.")	a) Defrost termination temperature 59°F (15°C) F-7 and Earlier or 45°F (7.2°C) F-8 and Later not achieved.
	b) Defrost thermistor connection loose.
3. Control Module	a) Defective.
4. Compressor Relay	a) Defective.

III. Controls and Adjustments

A. Control Module

All models are pretested and factory set. When the power switch is moved to the "ON" position there is a slight delay, then the current cabinet temperature is displayed. From the display module, the cabinet setpoint and temperature display scale can be changed.

Note: When exposed to high temperatures, a high-temperature alarm "Hi" may occur at start-up. To silence the alarm, press and release the upper button. Alarm clears once temperature is within factory parameters. For details, see "III.D. Alarm Safeties."

NOTICE
• The control module is fragile, handle very carefully. • Do not change wiring and connections. Never misconnect terminals. • Do not short out power supply to test for voltage.

1. Display Icons

Control Module Icons	
Icon	**Meaning**
	Compressor Compressor running.
	Defrost Appliance is in defrost cycle. See "II.B. Service Diagnosis" for details.
	Evaporator Fan Motor Evaporator fan motor is running. Evaporator fan motor de-energizes when door is open and when appliance is in defrost.
	Alarm Appliance is in alarm. See "III.D. Alarm Safeties" for details.

2. Display Layout

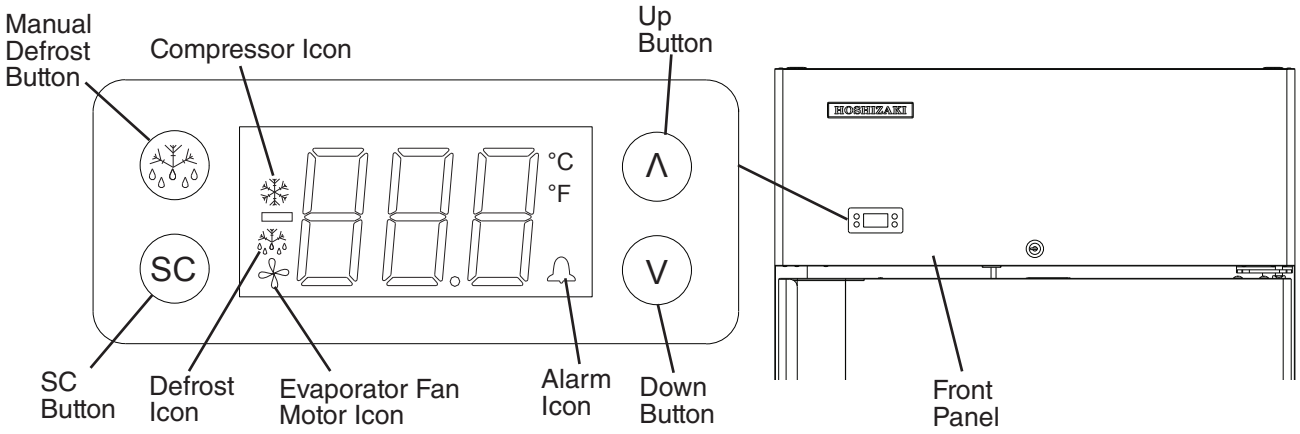

3. Control Module Connections

Auxiliary Codes:
Refrigerators: F-6 and Earlier*
Freezers: F-7 and Earlier*

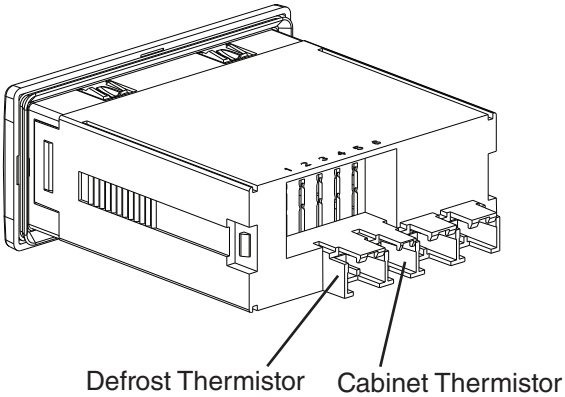

Auxiliary Codes:
Refrigerators: F-7 and Later*
Freezers: F-8 and Later*

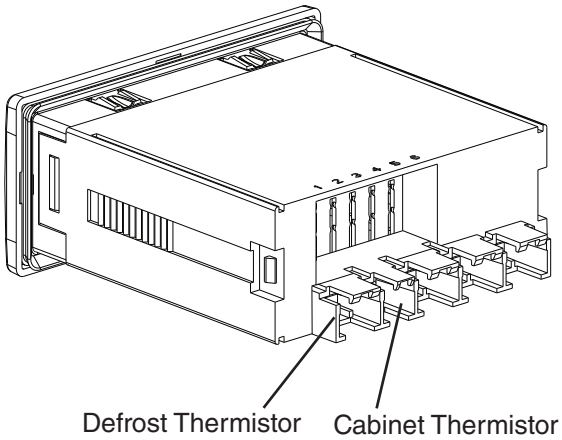

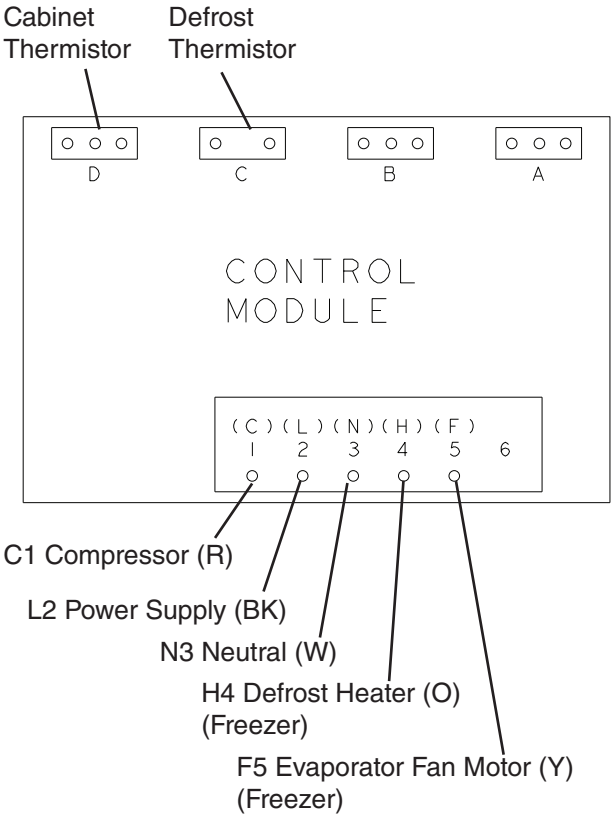

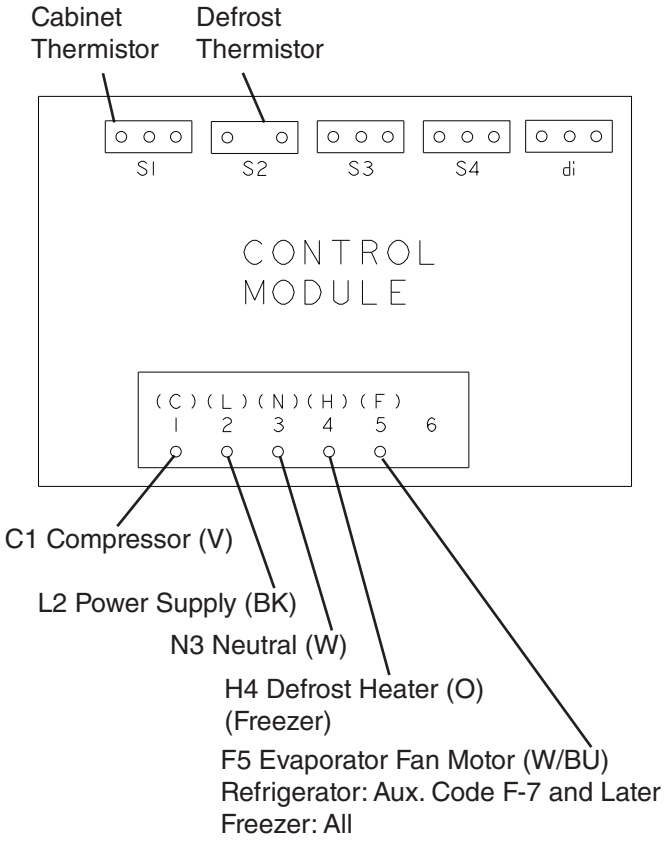

***NOTE: The following models received the new control module with the previous program parameters.**
Refrigerators: CR1S-FS Auxiliary Code F61654E to F61703E
Freezers: CF1S-FS Auxiliary Code F71344E to F71393E
CF2S-FS Auxiliary Code F71596E to F71645E

B. Temperature

The temperature default scale is °F, but it can be changed to read °C. To change, see "III.B.3. Changing the Temperature Display Scale (°F or °C)" below.

1. Default Settings

a) Temperature Setpoint:

Model	Auxiliary Code	Temperature Setpoint
Refrigerator	F-6 and Earlier	36°F (2°C)
	F-7 and Later	33°F (1°C)
Freezer	All	-4°F (-20°C)

b) Temperature Display Scale: °F.

2. Temperature Setpoint

The temperature setpoint is the value for the average cabinet temperature. The temperature differential for the compressor to turn on and off is ±3°F (±1.7°C) of the temperature setpoint. For example, for a refrigerator temperature setpoint of 36°F (2°C), the compressor comes on at 39°F (3.7°C), and the compressor goes off at 33°F (0.3°C). If necessary, adjust the temperature setpoint as follows:

1) Press and hold the upper or lower button briefly, then release. The current temperature setpoint flashes.

2) Press the upper or lower button until the desired value is displayed. After a few sec., the display returns to the current cabinet temperature and the temperature setpoint is saved.

- For refrigerators, the temperature setpoint is adjustable between 31°F and 52°F (-0.5°C and 11°C).
- For freezers, the temperature setpoint is adjustable between -10°F and +12°F (-24°C and -11°C).

Note: Do not adjust the temperature setpoint more than 2°F (1°C) at a time. Allow the temperature to stabilize for a minimum of 8 hours before making further temperature setpoint adjustments.

3. Changing the Temperature Display Scale (°F or °C)

To change the temperature display scale, follow the steps below.

1) Press and hold both the up and down buttons for 5 sec. "PAS" appears briefly in the display, then "000" appears.

2) Press the up button to change the display to "001".

3) Press the SC button. "LHE" appears in the display. Press the up or down button until "diS" is displayed.

4) Press the SC button. "CFu" appears in the display. Press the SC button again. The current temperature display scale setting appears.

5) Press the up or down button to change the temperature display scale.

6) Press the SC button to save the setting. Wait 1 min. or press the manual defrost button twice to return to the temperature display.

C. Defrost

To initiate a manual defrost, press the manual defrost button briefly. The defrost icon and "dEF" appear in the display.

1. Refrigerators

Refrigerators use a time-initiated, off-cycle defrost and defrost once every 2 hours. As soon as power is turned on the 2-hr. defrost timer starts. Once the 2-hr. defrost timer terminates, defrost begins. When the defrost thermistor warms to 44°F (6.6°C), defrost terminates. The minimum defrost time is 20 minutes and the maximum defrost time is 1 hour. Cabinet temperature is displayed during defrost.

2. Freezers

Freezers use a cumulative compressor run time-initiated heated defrost. Once the compressor energizes, the cumulative compressor run timer starts (4 hours F-7 and earlier or 5 hours F-8 and later). When the cumulative compressor run timer terminates, defrost begins. Cabinet temperature is not displayed during defrost; "dEF" is displayed in its place. When the defrost thermistor warms to 45°F (7.2°C), defrost terminates. A 3-minute compressor delay timer, a 7-minute evaporator fan motor delay timer, and an 18-minute temperature display delay timer start. As the delay timers terminate, the related components energize. Note that the 7-minute evaporator fan motor delay time is a maximum; if the defrost thermistor cools to 25°F (-3.9°C) before the 7-minute evaporator fan motor delay timer terminates, the evaporator fan motor will energize. Freezers have a minimum defrost interval of 4 hours. The minimum defrost time is 5 minutes and the maximum defrost time is 1 hour.

D. Alarm Safeties

Alarm signals are designed to protect the appliance and food product. These alarms give information or warnings in the event the appliance is operating out of acceptable parameters. Should one of the alarms occur, follow the instructions in the table below to address the alarm. The alarm code flashes once every second with audible alarm. To silence the alarm, press and release the upper button.

Alarm Signals		
Alarm Code	**Problem**	**Corrective Action/Reset Details**
E01	Cabinet Thermistor Malfunction Alarm Cabinet thermistor has failed.	Beeps for 10 sec., then silent for 50 sec.. To silence the alarm, press and release the up button. Appliance cycles 5 min. on, 5 min. off.
E02	Defrost Thermistor Malfunction Alarm Defrost thermistor has failed.	Beeps for 10 sec., then silent for 50 sec. To silence the alarm, press and release the up button. Appliance cycles on and off with cabinet thermistor.
Hi	High Temperature Alarm **Refrigerator:** Cabinet temperature has remained above 57°F (13.9°C) for more than 2 hr. **Freezer:** Cabinet temperature has remained above 26°F (-3.3°C) for more than 2 hr.	Beeps for 10 sec., then silent for 50 sec. To silence the alarm and clear "Hi" from the display, press and release the up button. The alarm icon stays on. Automatically resets when temperature returns to normal.
Lo	Low Temperature Alarm **Refrigerator:** Cabinet temperature has remained below 26°F (-3.3°C) for more than 2 hr. **Freezer:** Cabinet temperature has remained below -23°F (-30.6°C) for more than 2 hr.	Beeps for 10 sec., then silent for 50 sec. To silence the alarm and clear "Lo" from the display, press and release the up button. The alarm icon stays on. Automatically resets when temperature returns to normal.

E. Safety Devices

1. Compressor External or Internal Protector

If combined temperature/amperage value is above the limit specified by the compressor manufacturer, the compressor external or internal protector operates independently to turn off the compressor. The compressor external or internal protector de-energizes the compressor until the temperature/amperage value returns to an acceptable level.

- If the condenser fan motor is operating and the compressor is off, it is most likely that the compressor external or internal protector opened. If both the compressor and condenser fan motor are off, it is most likely the appliance is off or the high-pressure switch has opened. For further details, see "II.B. Service Diagnosis."
- On refrigerators and 1-section freezers, the compressor protector is an internal protector. On 2-section freezers, the compressor protector is an external protector.

2. Short-Cycle Protection

There is a 2-min. minimum off-time and on-time for the compressor.

Note: Time may vary with compressor protector or high-pressure switch activation.

3. High-Pressure Switch

If pressure on the high-side of the appliance exceeds Hoshizaki specifications, the high-pressure switch activates and interrupts the compressor circuit, de-energizing the compressor until the pressure returns to an acceptable level.

F. Mullion/Perimeter Heater

Freezers are equipped with mullion and perimeter heaters. The heaters are energized as follows:

F-7 and earlier: As soon as the power switch is turned on.

F-8 and later: When compressor and condenser fan motor energize.

IV. Replacement of Components

⚠ WARNING

- The appliance should be diagnosed and repaired only by qualified service personnel to reduce the risk of death, electric shock, serious injury, or fire.
- Move the power switch to the "OFF" position, then unplug the appliance from the electrical outlet before servicing.
- Make sure all food zones in the appliance are clean after the appliance is serviced.

A. Service for Refrigerant Lines

⚠ WARNING

- Repairs requiring the refrigeration circuit to be opened must be performed by properly trained and EPA-certified service personnel.
- Always recover the refrigerant and store it in an approved container. Do not discharge the refrigerant into the atmosphere.
- Use an electronic leak detector or soap bubbles to check for leaks. Add a trace of refrigerant to the system (if using an electronic leak detector), and then raise the pressure using nitrogen gas (140 PSIG). DO NOT use R-134a or R-404A as a mixture with pressurized air for leak testing.

NOTICE

- Do not leave the system open for longer than 15 min. when replacing or servicing parts. The Polyol Ester (POE) oils used in R-134a and R-404A appliances can absorb moisture quickly. Therefore it is important to prevent moisture from entering the system when replacing or servicing parts.
- Always install a new drier every time the sealed refrigeration system is opened.
- Do not replace the drier until after all other repair or replacement has been made. Install the new drier with the arrow on the drier in the direction of the refrigerant flow.
- When brazing, protect the drier by using a wet cloth to prevent the drier from overheating. Do not allow the drier to exceed 250°F (121°C).

1. Refrigerant Recovery

The appliance is provided with refrigerant access valves. Using proper refrigerant practices recover the refrigerant from the access valves and store it in an approved container. Do not discharge the refrigerant into the atmosphere.

2. Brazing

⚠ WARNING

- R-134a and R-404A themselves are not flammable at atmospheric pressure and temperatures up to 176°F (80°C).
- R-134a and R-404A themselves are not explosive or poisonous. However, when exposed to high temperatures (open flames), R-134a and R-404A can be decomposed to form hydrofluoric acid and carbonyl fluoride both of which are hazardous.
- Do not use silver alloy or copper alloy containing arsenic.
- Use an electronic leak detector or soap bubbles to check for leaks. Add a trace of refrigerant to the system (if using an electronic leak detector), and then raise the pressure using nitrogen gas (140PSIG). Do not use R-134a or R-404A as a mixture with pressurized air for leak testing.

1) Braze all fittings while purging with nitrogen gas flowing at a pressure of 3 to 4 PSIG.

NOTICE

- Always install a new drier every time the sealed refrigeration system is opened.
- Do not replace the drier until after all other repair or replacement has been made. Install the new drier with the arrow on the drier in the direction of the refrigerant flow.
- When brazing, protect the drier by using a wet cloth to prevent the drier from overheating. Do not allow the drier to exceed 250°F (121°C).

2) Use an electronic leak detector or soap bubbles to check for leaks. Add a trace of refrigerant to the system (if using an electronic leak detector), and then raise the pressure using nitrogen gas (140 PSIG). Do not use R-134a or R-404A as a mixture with pressurized air for leak testing.

3. Evacuation and Recharge

1) Attach a vacuum pump to the system. Be sure the charging hoses are connected to both high and low-side access valves.

IMPORTANT

The vacuum level and vacuum pump may be the same as those for current refrigerants. However, the rubber hose and gauge manifold to be used for evacuation and refrigerant charge should be exclusively for POE oils.

2) Turn on the vacuum pump. Open the gauge manifold valves. Never allow the oil in the vacuum pump to flow backwards.

3) Allow the vacuum pump to pull down to a 29.9" Hg vacuum. Evacuating period depends on pump capacity.

4) Close the low-side valve and high-side valve on the gauge manifold.

5) Disconnect the gauge manifold hose from the vacuum pump and attach it to a refrigerant service cylinder. Remember to loosen the connection and purge the air from the hose. See the nameplate for the required refrigerant charge. Hoshizaki recommends only virgin refrigerant or reclaimed refrigerant which meets ARI Standard 700 (latest edition) be used.

6) A liquid charge is required when charging an R-404A system (to prevent fractionation) and optional when charging an R-134a system. Place the service cylinder on the scales; if the service cylinder is not equipped with a dip tube, invert the service cylinder, then place it on the scales. Open the high-side valve on the gauge manifold.

7) Allow the system to charge with liquid until the proper charge weight is met.

8) If necessary, add any remaining charge to the system through the low-side.
NOTICE! **To prevent compressor damage, use a throttling valve or liquid dispensing device to add the remaining liquid charge through the low-side access valve with the appliance running.**

9) Close gauge manifold valves and disconnect the hoses.

10) Cap the access valves to prevent a possible leak.

B. Important Notes for Component Replacement

NOTICE
• When replacing a component listed below, see the notes to help ensure proper operation.

Component	Notes
Compressor	Install a new start relay, start capacitor, and external protector (on 2-section freezers only).
Compressor, Evaporator Fan Motor, Condenser Fan Motor	**WARNING! To reduce the risk of electric shock, be sure to reconnect the component's ground wire.**
Thermostatic Expansion Valve	• Attach the thermostatic expansion valve bulb to the suction line in the same location as the previous bulb. • Secure the bulb with the clamp and holder, then insulate it.
Defrost Thermistor	After working with or around the defrost thermistor on a freezer, make sure the defrost thermistor wire is not touching the defrost heater.

C. Door Reversal

The appliance is provided with a cabinet design which, after being delivered to the installation location, permits changing of the door swing from left to right or right to left. To change the door swing, an HS kit from your local Hoshizaki distributor is required. See the table below. ***NOTICE!*** **Improper installation of the HS kit may result in the doors not closing completely and/or the gaskets not sealing correctly**. For further details, contact your local Hoshizaki distributor or Hoshizaki Technical Support at 1-800-233-1940.

Door Type	Convert	HS Kit Number
Full Glass	Right Hinge to Left Hinge	**HS-5177**
	Left Hinge to Right Hinge	**HS-5176**
Full Solid	Right Hinge to Left Hinge	**HS-3726**
	Left Hinge to Right Hinge	**HS-3725**
Half Solid	Right Hinge to Left Hinge	**HS-3725**
	Left Hinge to Right Hinge	**HS-3726**

V. Maintenance

⚠ WARNING

- Move the power switch to the "OFF" position and unplug the appliance before performing maintenance to prevent electric shock or injury by moving parts. To reduce the risk of electric shock, do not touch the power switch or plug with damp hands.
- Before performing maintenance, move all foods into another clean refrigerator or freezer.

1. Condenser

Check the condenser once a year and use a brush or vacuum cleaner to clean the condenser as required.

2. Power Supply Connection

If a plug, power cord, or receptacle (three-section models) is damaged, replace it. Be sure to connect the ground wire.

VI. Preparing the Appliance for Periods of Non-Use

⚠ WARNING

- When preparing the appliance for long storage, prevent the doors from closing to reduce the risk of children getting trapped.
- To reduce the risk of electric shock, do not touch the attachment plug or power switch with damp hands.
- When shutting down the appliance for more than one week, move the power switch to the "OFF" position and unplug the appliance.
- Do not plug in/unplug the appliance to start/stop operation. Make sure the power switch is in the "OFF" position before plugging in or unplugging the appliance to reduce the risk of electric shock.

1) Before shutting down the appliance, move the stored food into another refrigerator or freezer.
2) Reach over the front panel and move the power switch to the "OFF" position. The appliance will shut down.
3) Unplug the appliance.

IMPORTANT

When preparing the appliance for long storage, clean the cabinet interior, door gaskets, and shelves.

VII. Disposal

⚠ WARNING

When preparing the appliance for disposal, remove the door to reduce the risk of children getting trapped. Leave the shelves in place so that children may not easily climb inside.

The appliance contains refrigerant and must be disposed of in accordance with applicable national, state, and local codes and regulations. Refrigerant must be recovered by properly certified service personnel.

VIII. Technical Information

A. Electrical and Refrigerant Data

Model	AC Supply Voltage	Amperes	Design Pressure (PSIG)		Refrigerant (oz.)	
			HIGH	LOW	134a	404A
CR1S-FGE/FGECL/FGECR/FGY/ FGYCL/FGYCR/FS/FSL/HS/HSL	115/60/1	4	240	120	11	-
CF1S-FGE/FGY/FS/FSL/HS/HSL		9	450	250	-	7.5
CR2S-FS/HS		7	240	120	12	-
CR2S-FGE		7			14	-
CR2S-FGY		6.2				
CF2S-FS/HS		11	450	250	-	17
CF2S-FGE						
CF2S-FGY		9.8				
CR3S-FS/HS	115/60/1	12	240	120	1-Section 11 2-Section 12	-
CF3S-FS/HS	208-230/115/60/1	16	450	250	-	1-Section 8 2-Section 17

See the nameplate for electrical and refrigerant data. The nameplate is located inside the cabinet.
We reserve the right to make changes in specifications and design without prior notice.

B. Wiring Diagrams

1. CR1S-FS/FSL/HS/HSL Auxiliary Code E-5 and Earlier

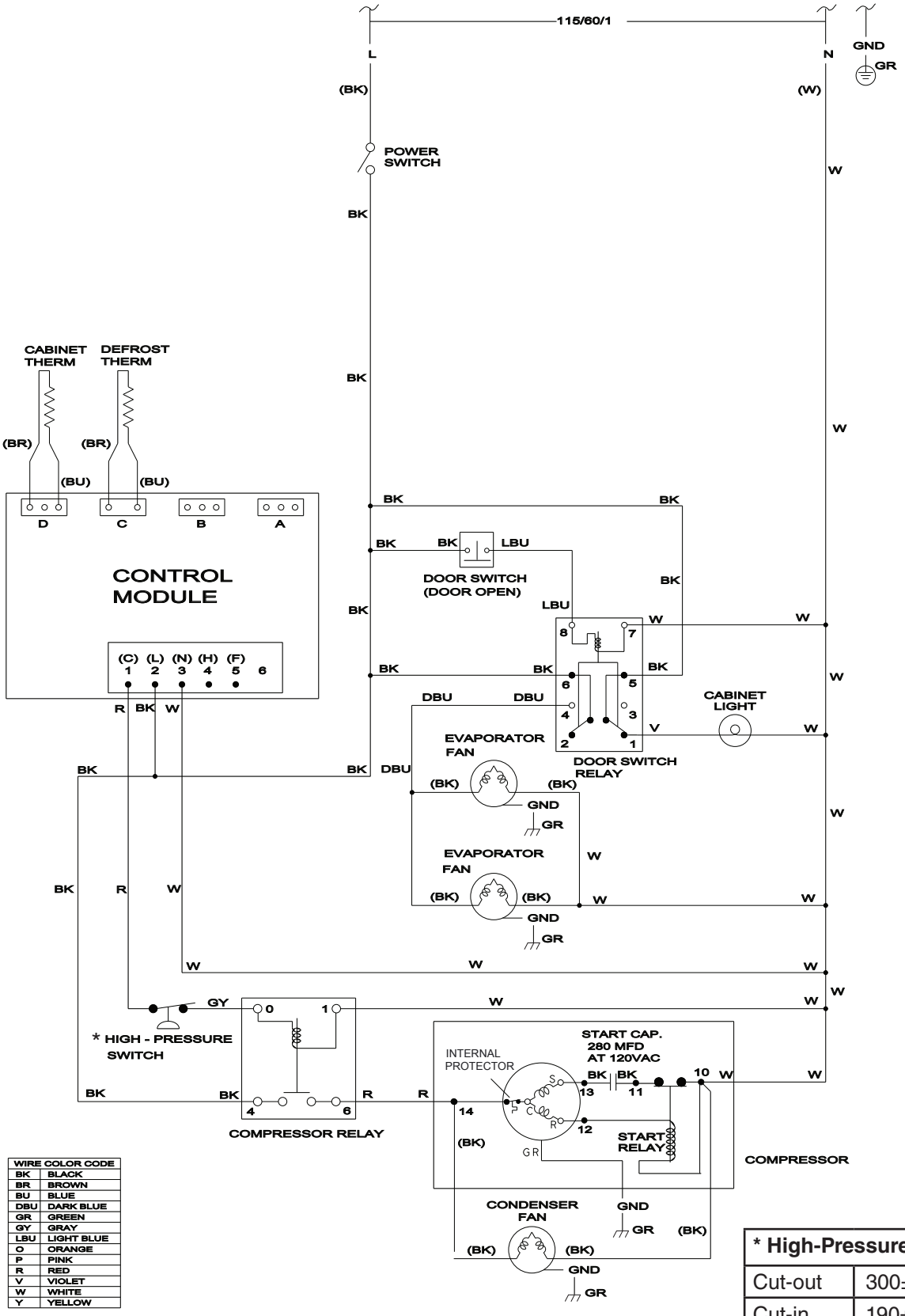

WIRE COLOR CODE	
BK	BLACK
BR	BROWN
BU	BLUE
DBU	DARK BLUE
GR	GREEN
GY	GRAY
LBU	LIGHT BLUE
O	ORANGE
P	PINK
R	RED
V	VIOLET
W	WHITE
Y	YELLOW

* High-Pressure Switch	
Cut-out	300±10 PSIG
Cut-in	190±20 PSIG

2. CR2S-FS/HS Auxiliary Code E-5 and Earlier

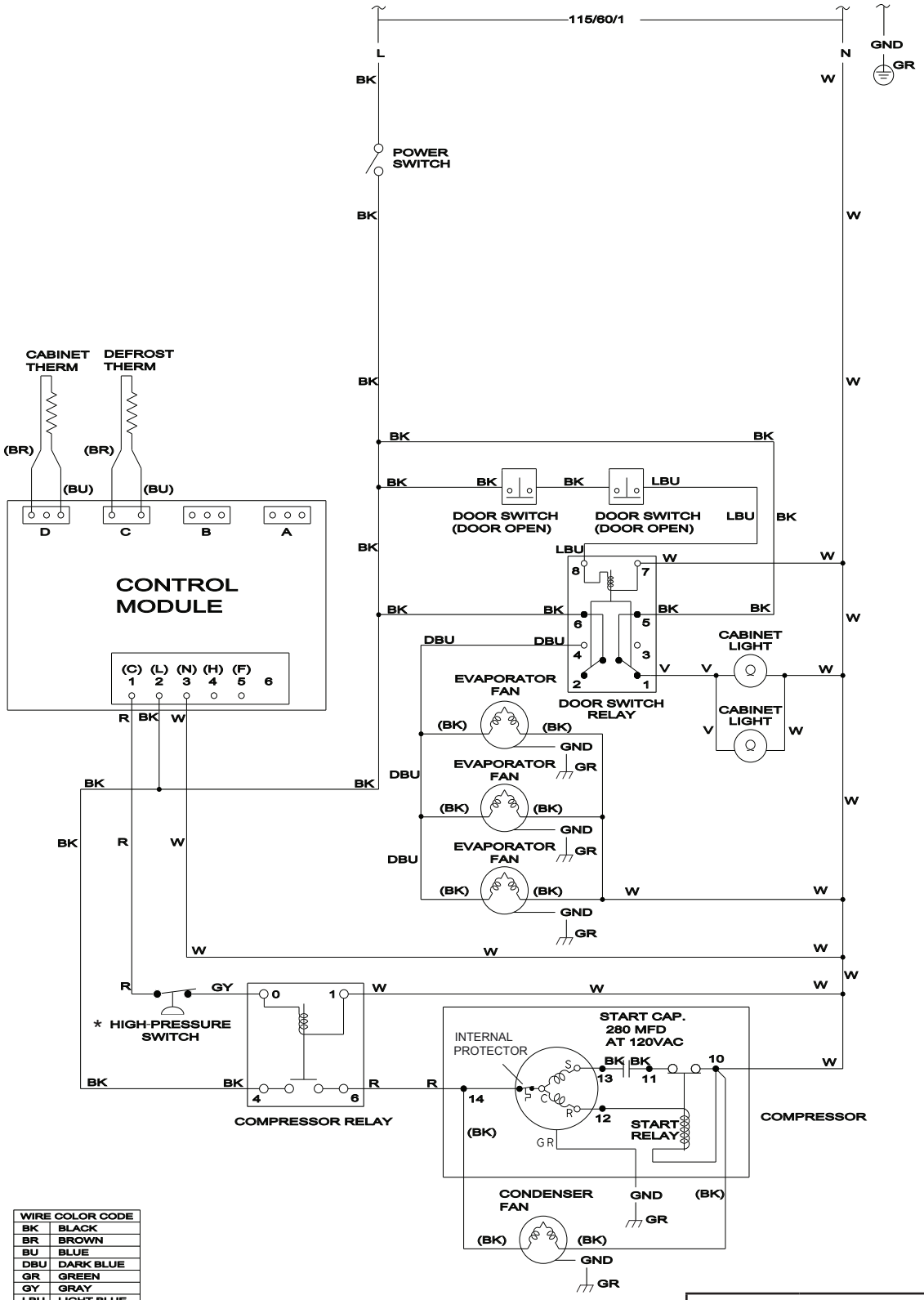

WIRE COLOR CODE	
BK	BLACK
BR	BROWN
BU	BLUE
DBU	DARK BLUE
GR	GREEN
GY	GRAY
LBU	LIGHT BLUE
O	ORANGE
P	PINK
R	RED
V	VIOLET
W	WHITE
Y	YELLOW

* High-Pressure Switch	
Cut-out	300±10 PSIG
Cut-in	190±20 PSIG

3. CR1S-FGY/FS/FSL/HS/HSL,

CR2S-FGY/FS/HS/FGY,

CR3S-FS/HS Auxiliary Code E-6 to F-6

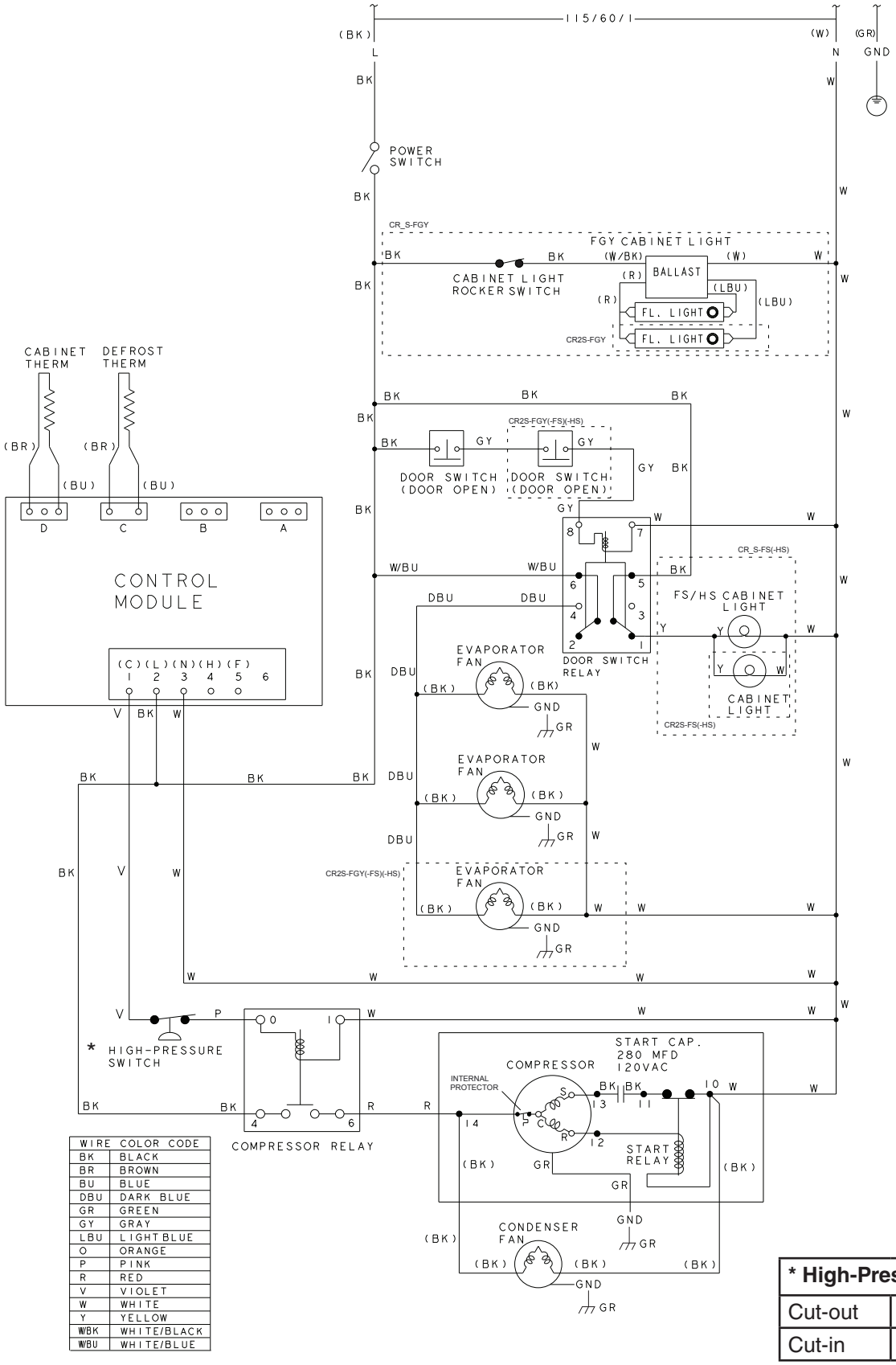

WIRE	COLOR CODE
BK	BLACK
BR	BROWN
BU	BLUE
DBU	DARK BLUE
GR	GREEN
GY	GRAY
LBU	LIGHT BLUE
O	ORANGE
P	PINK
R	RED
V	VIOLET
W	WHITE
Y	YELLOW
W/BK	WHITE/BLACK
W/BU	WHITE/BLUE

* High-Pressure Switch	
Cut-out	300±10 PSIG
Cut-in	190±20 PSIG

4. CR1S-FGE/FGECL/FGECR/FS/FSL/HS/HSL,

CR2S-FGE/FS/HS Auxiliary Code F-7 and Later

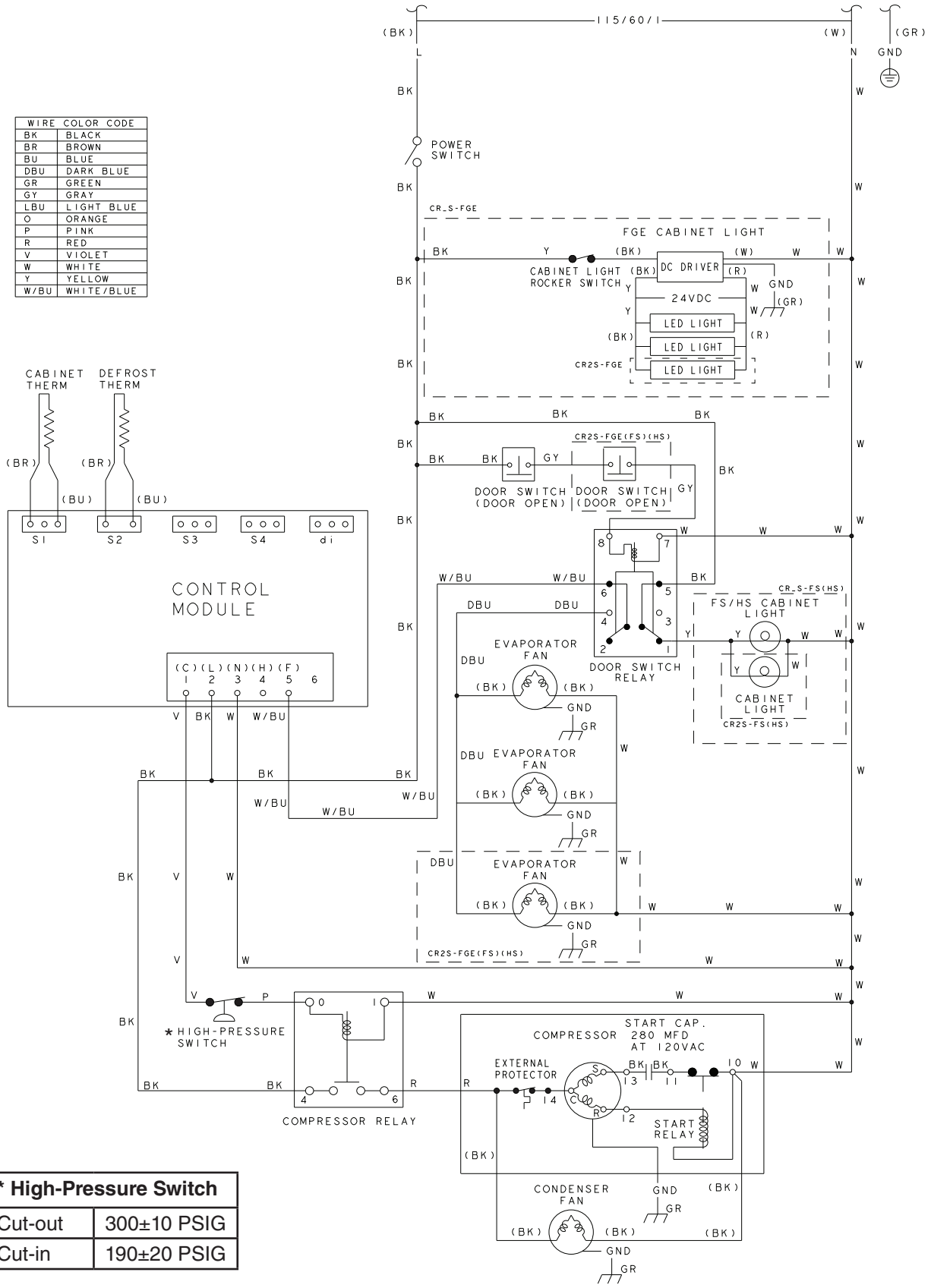

WIRE COLOR CODE	
BK	BLACK
BR	BROWN
BU	BLUE
DBU	DARK BLUE
GR	GREEN
GY	GRAY
LBU	LIGHT BLUE
O	ORANGE
P	PINK
R	RED
V	VIOLET
W	WHITE
Y	YELLOW
W/BU	WHITE/BLUE

* High-Pressure Switch	
Cut-out	300±10 PSIG
Cut-in	190±20 PSIG

5. CF1S-FS/FSL/HS/HSL Auxiliary Code E-5 and Earlier

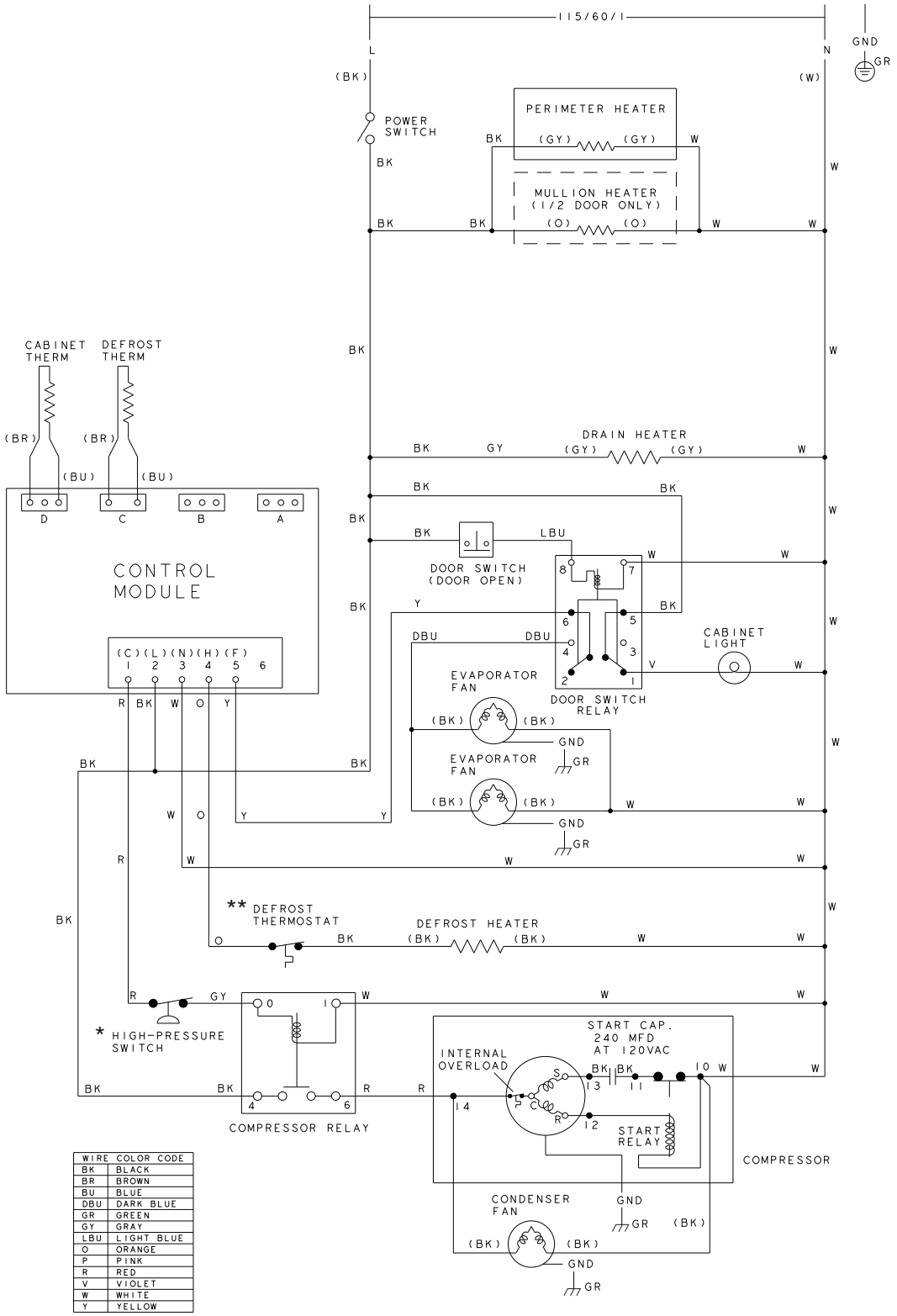

WIRE	COLOR CODE
BK	BLACK
BR	BROWN
BU	BLUE
DBU	DARK BLUE
GR	GREEN
GY	GRAY
LBU	LIGHT BLUE
O	ORANGE
P	PINK
R	RED
V	VIOLET
W	WHITE
Y	YELLOW

* High-Pressure Switch	
Cut-out	490±10 PSIG
Cut-in	370±20 PSIG

** Defrost Thermostat	
Cut-out	120°F±5°F (49°C±3°C)
Cut-in	70°F±5°F (21°C±3°C)

6. CF1S-FS/FSL/HS/HSL Auxiliary Code E-6 to F-7

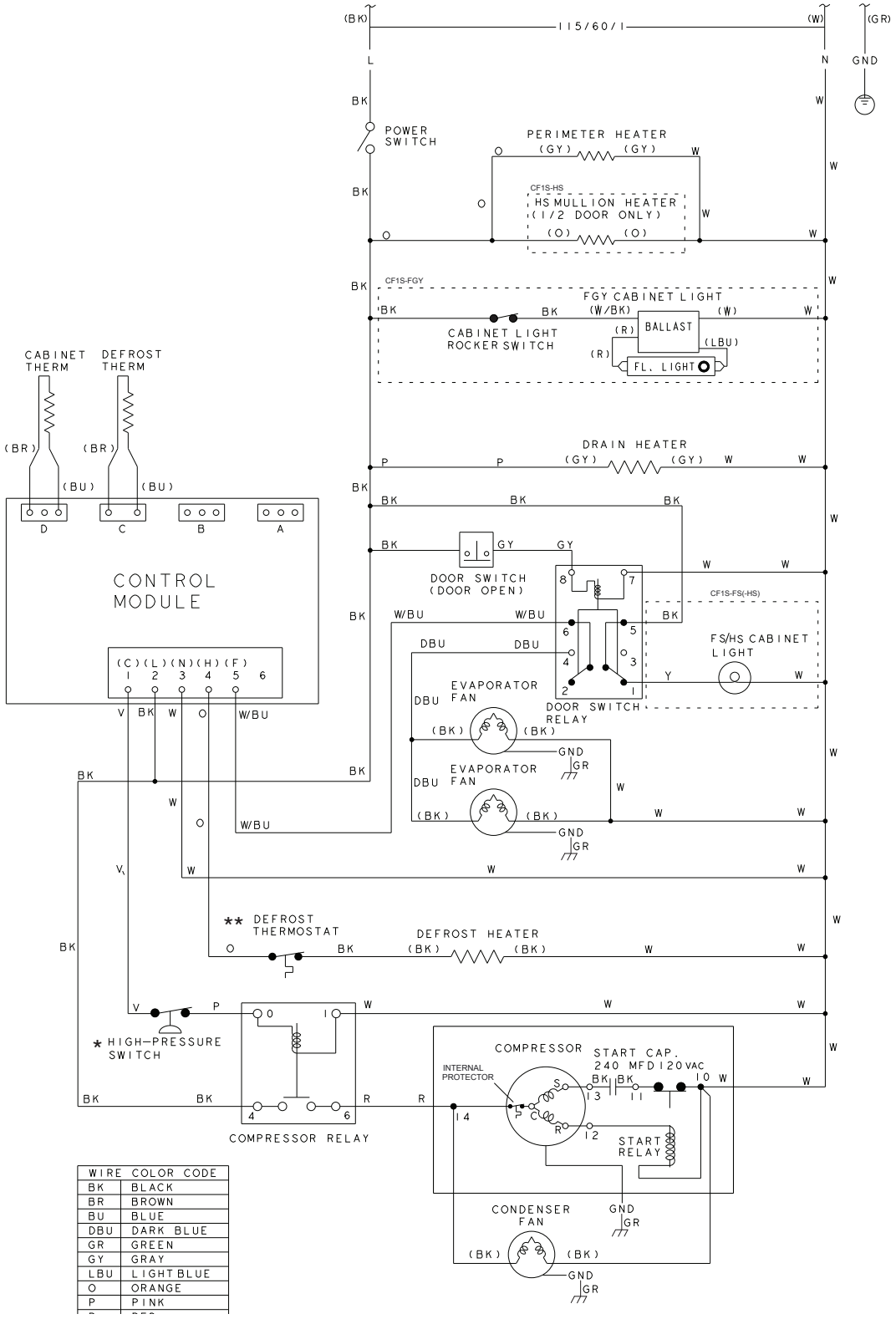

WIRE	COLOR CODE
BK	BLACK
BR	BROWN
BU	BLUE
DBU	DARK BLUE
GR	GREEN
GY	GRAY
LBU	LIGHT BLUE
O	ORANGE
P	PINK

* High-Pressure Switch	
Cut-out	490±10 PSIG
Cut-in	370±20 PSIG

** Defrost Thermostat	
Cut-out	120°F±5°F (49°C±3°C)
Cut-in	70°F±5°F (21°C±3°C)

7. CF1S-FGE/FGECL/FGECR/FS/HS F-8 and Later

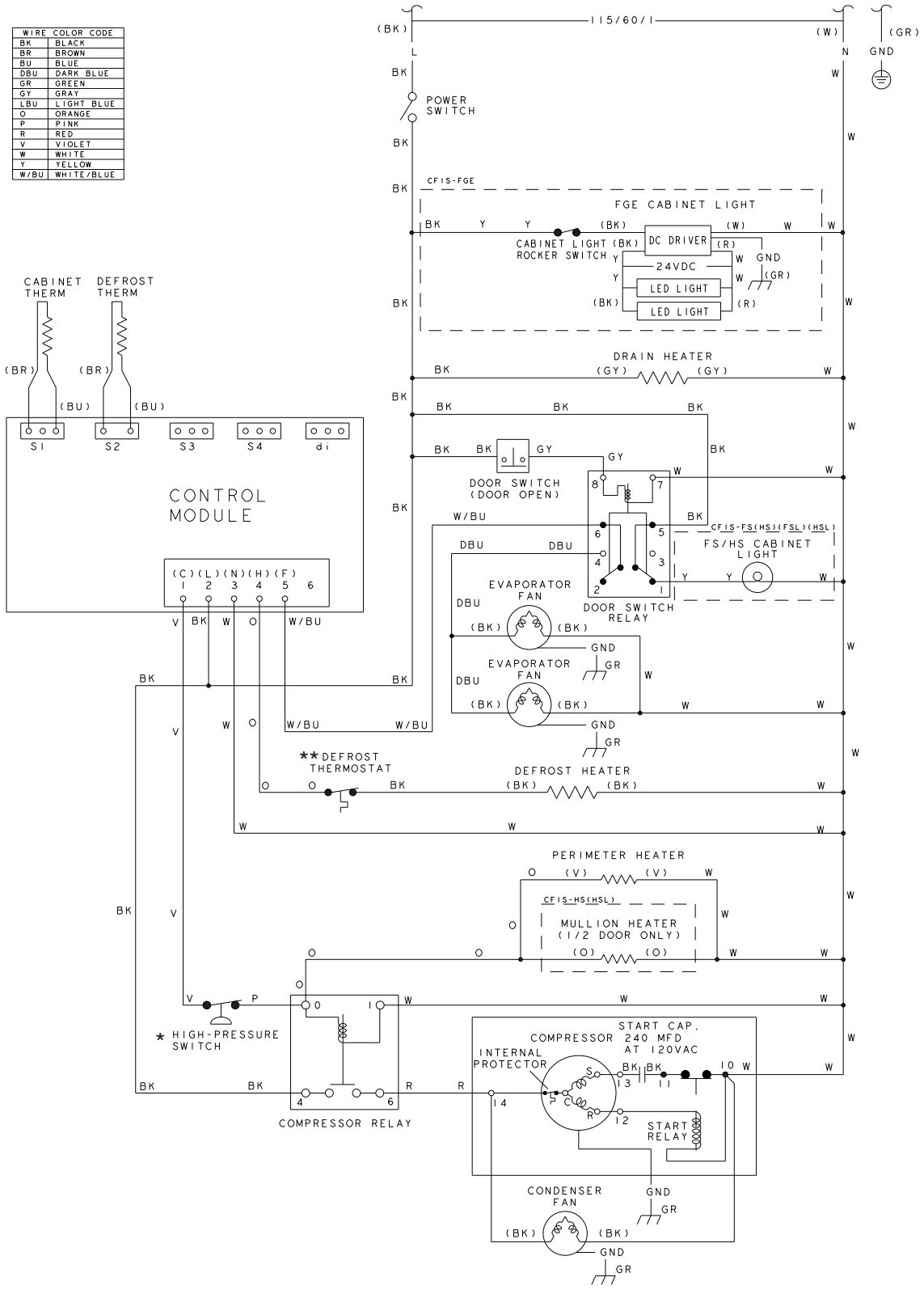

* High-Pressure Switch	
Cut-out	490±10 PSIG
Cut-in	370±20 PSIG

** Defrost Thermostat	
Cut-out	120°F±5°F (49°C±3°C)
Cut-in	70°F±5°F (21°C±3°C)

8. CF2S-FS/HS Auxiliary Code E-5 and Earlier

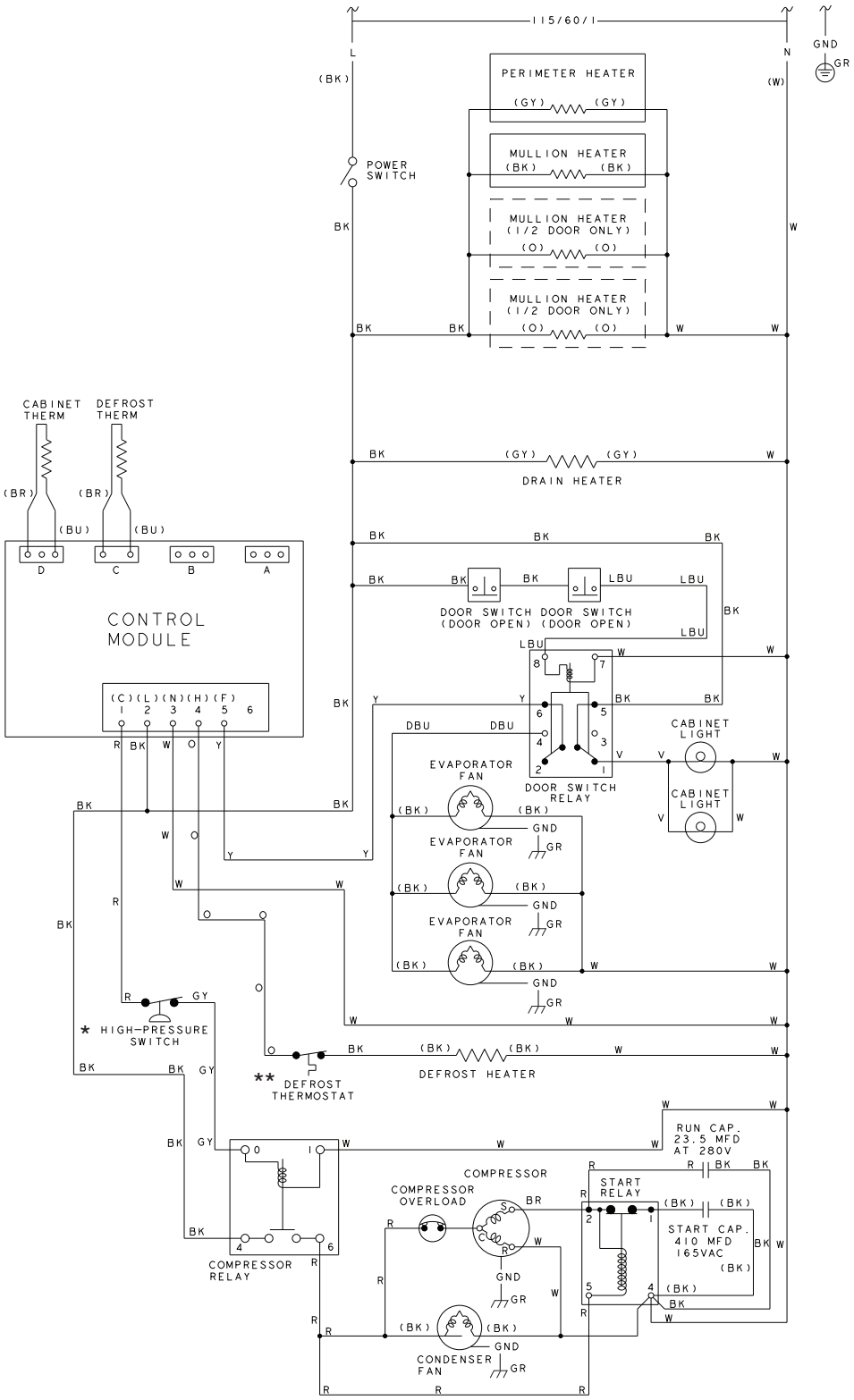

WIRE	COLOR CODE
BK	BLACK
BR	BROWN
BU	BLUE
DBU	DARK BLUE
GR	GREEN
GY	GRAY
LBU	LIGHT BLUE
O	ORANGE
P	PINK
R	RED
V	VIOLET
W	WHITE
Y	YELLOW

* High-Pressure Switch	
Cut-out	490±10 PSIG
Cut-in	370±20 PSIG

** Defrost Thermostat	
Cut-out	120°F±5°F (49°C±3°C)
Cut-in	70°F±5°F (21°C±3°C)

9. CF2S-FS/FSL/HS/HSL Auxiliary Code E-6 to F-7

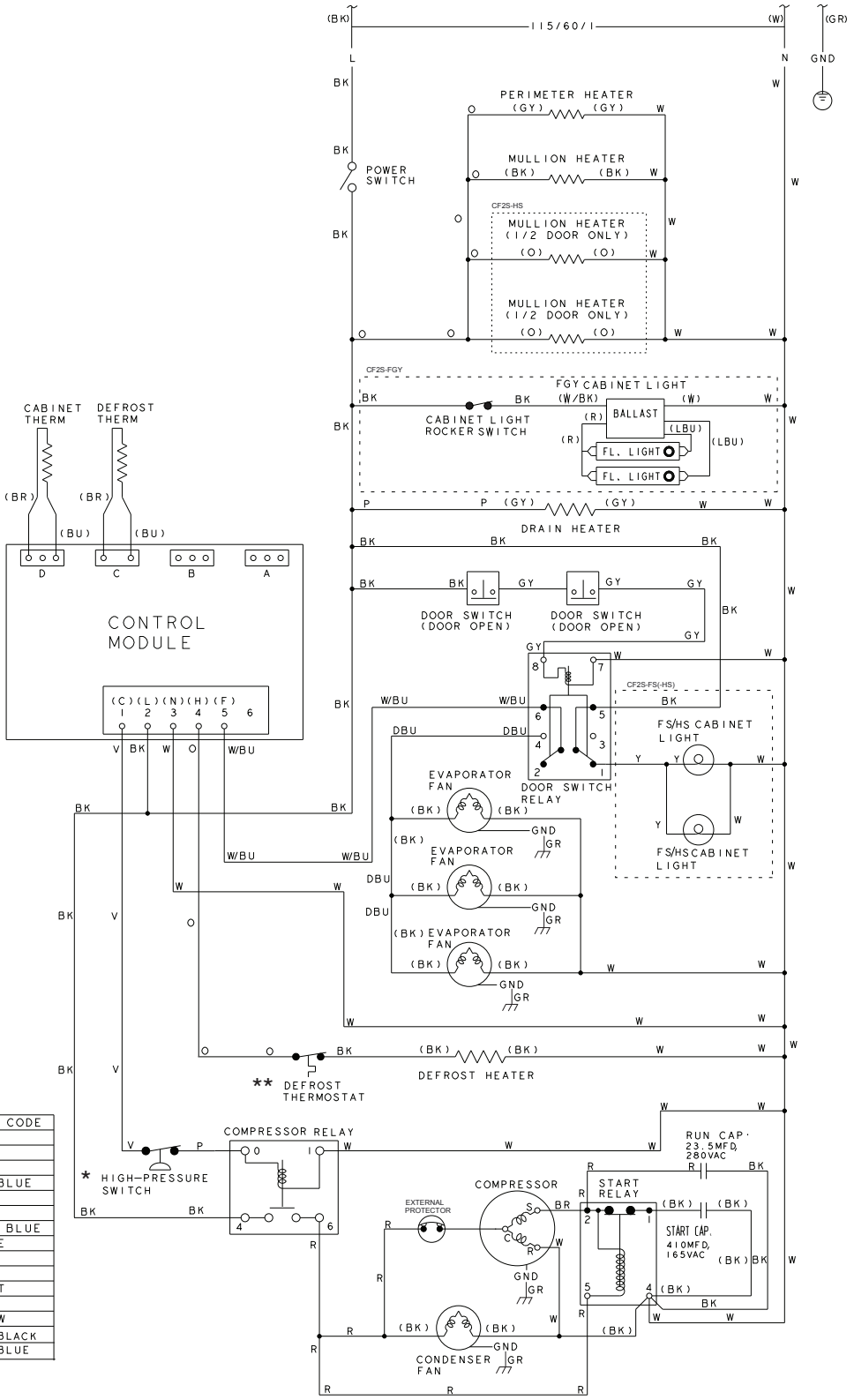

WIRE	COLOR CODE
BK	BLACK
BR	BROWN
BU	BLUE
DBU	DARK BLUE
GR	GREEN
GY	GRAY
LBU	LIGHT BLUE
O	ORANGE
P	PINK
R	RED
V	VIOLET
W	WHITE
Y	YELLOW
WBK	WHITE/BLACK
WBU	WHITE/BLUE

* High-Pressure Switch	
Cut-out	490±10 PSIG
Cut-in	370±20 PSIG

** Defrost Thermostat	
Cut-out	120°F±5°F (49°C±3°C)
Cut-in	70°F±5°F (21°C±3°C)

10. CF2S-FGE/FGECL/FGECR/FS/FSL/HS/HSL Auxiliary Code F-8 and Later

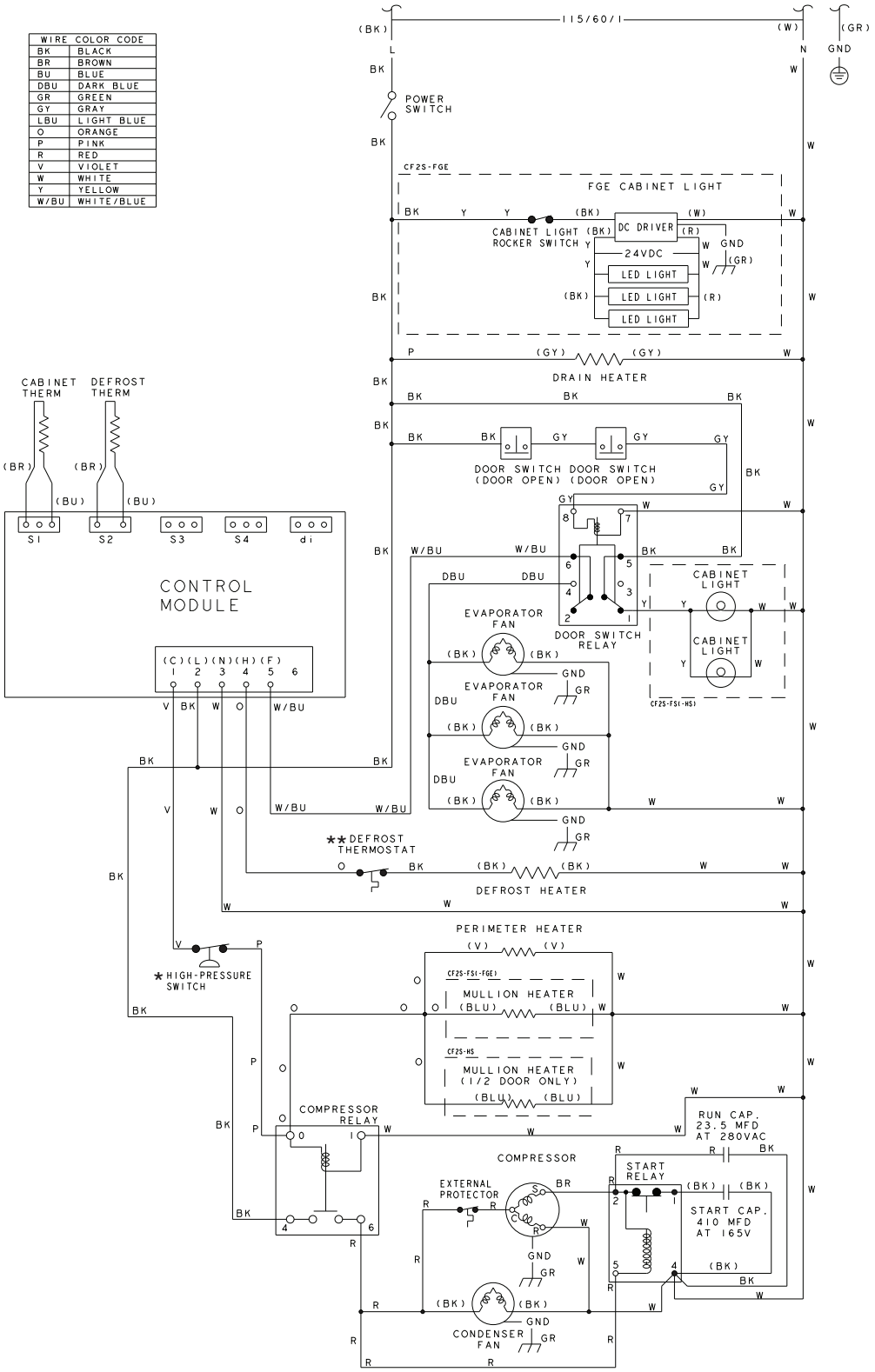

* High-Pressure Switch	
Cut-out	490±10 PSIG
Cut-in	370±20 PSIG

** Defrost Thermostat	
Cut-out	120°F±5°F (49°C±3°C)
Cut-in	70°F±5°F (21°C±3°C)

11. CR3S-FS/HS Receptacle Box Connection

WIRE	COLOR CODE
BK	BLACK
GR	GREEN
W	WHITE

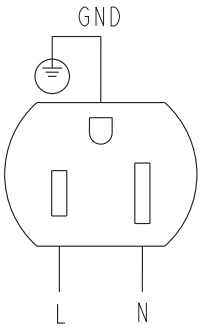

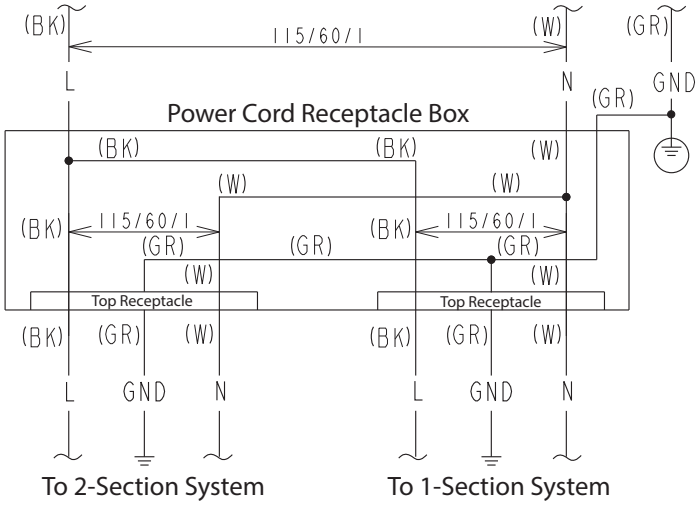

Note: Only the top receptacles have power.

WIRE	COLOR CODE
BK	BLACK
GR	GREEN
R	RED
W	WHITE

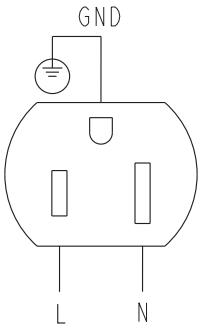

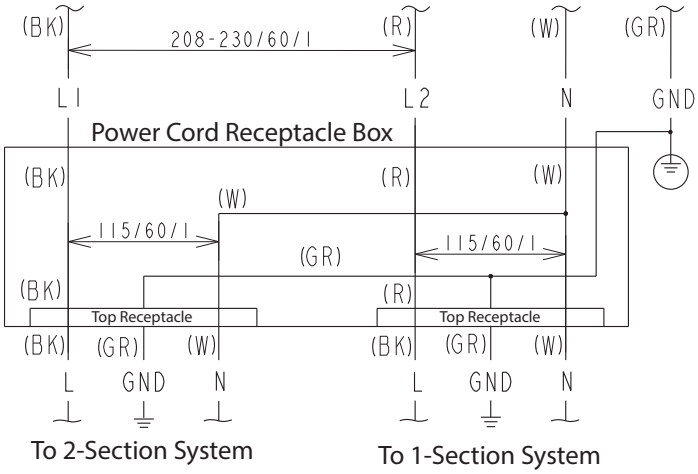

Note: Only the top receptacles have power.