MANITOWOC®

NEO™

UnderCounter Ice Machines

Installation, Operation and Maintenance Manual

Original Document

⚠ **Caution**

Read this instruction before operating this equipment.

Part Number: 040005890 Rev 01 06/18

WELBILT®

Safety Notices

Safety Notices

Read these precautions to prevent personal injury:

- Read this manual thoroughly before operating, installing or performing maintenance on the equipment. Failure to follow instructions in this manual can cause property damage, injury or death.
- Routine adjustments and maintenance procedures outlined in this manual are not covered by the warranty.
- Proper installation, care and maintenance are essential for maximum performance and trouble-free operation of your equipment.
  Visit our website www.manitowocice.com for manual updates, translations, or contact information for service agents in your area.
- This equipment contains high voltage electricity and refrigerant charge. Installation and repairs are to be performed by properly trained technicians aware of the dangers of dealing with high voltage electricity and refrigerant under pressure. The technician must also be certified in proper refrigerant handling and servicing procedures. All lockout and tag out procedures must be followed when working on this equipment.
- This equipment is intended for indoor use only. Do not install or operate this equipment in outdoor areas.

DEFINITIONS

⚠ DANGER

Indicates a hazardous situation that, if not avoided, will result in death or serious injury. This applies to the most extreme situations.

⚠ Warning

Indicates a hazardous situation that, if not avoided, could result in death or serious injury.

⚠ Caution

Indicates a hazardous situation that, if not avoided, could result in minor or moderate injury.

Notice

Indicates information considered important, but not hazard-related (e.g. messages relating to property damage).

NOTE: Indicates useful, extra information about the procedure you are performing.

⚠ Warning

Follow these precautions to prevent personal injury during installation of this equipment:

- Installation must comply with all applicable equipment fire and health codes with the authority having jurisdiction.
- To avoid instability the installation area must be capable of supporting the combined weight of the equipment and product. Additionally the equipment must be level side to side and front to back.
- Ice machines require a deflector when installed on an ice storage bin. Prior to using a non-OEM ice storage system with this ice machine, contact the bin manufacturer to assure their ice deflector is compatible.
- Remove all removable panels before lifting and installing and use appropriate safety equipment during installation and servicing. Two or more people are required to lift or move this appliance to prevent tipping and/or injury.
- Do not damage the refrigeration circuit when installing, maintaining or servicing the unit.
- Connect to a potable water supply only.
- Legs or casters must be installed and the legs/casters must be screwed in completely. When casters are installed the mass of this unit will allow it to move uncontrolled on an inclined surface. These units must be tethered/secured to comply with all applicable codes. Swivel casters must be mounted on the front and rigid casters must be mounted on the rear. Lock the front casters after installation is complete.

⚠ Warning

Follow these electrical requirements during installation of this equipment.

- All field wiring must conform to all applicable codes of the authority having jurisdiction. It is the responsibility of the end user to provide the disconnect means to satisfy local codes. Refer to rating plate for proper voltage.
- This appliance must be grounded.
- This equipment must be positioned so that the plug is accessible unless other means for disconnection from the power supply (e.g., circuit breaker or disconnect switch) is provided.
- Check all wiring connections, including factory terminals, before operation. Connections can become loose during shipment and installation.

⚠ Warning

Follow these precautions to prevent personal injury while operating or maintaining this equipment:

- Read this manual thoroughly before operating, installing or performing maintenance on the equipment. Failure to follow instructions in this manual can cause property damage, injury or death.
- Crush/Pinch Hazard. Keep hands clear of moving components. Components can move without warning unless power is disconnected and all potential energy is removed.
- Moisture collecting on the floor will create a slippery surface. Clean up any water on the floor immediately to prevent a slip hazard.
- Objects placed or dropped in the bin can affect human health and safety. Locate and remove any objects immediately.
- Never use sharp objects or tools to remove ice or frost. Do not use mechanical devices or other means to accelerate the defrosting process.
- When using cleaning fluids or chemicals, rubber gloves and eye protection (and/or face shield) must be worn.

⚠ Warning

Follow these refrigeration system requirements during installation, use or repair of this equipment.

- This equipment contains high voltage electricity and refrigerant charge. Installation and repairs are to be performed by properly trained technicians aware of the dangers of dealing with high voltage electricity and refrigerant under pressure. The technician must also be certified in proper refrigerant handling and servicing procedures. All lockout and tag out procedures must be followed when working on this equipment.
- Do not damage the refrigeration circuit when installing, maintaining or servicing the unit. Never use sharp objects or tools to remove ice or frost. Do not use mechanical devices or other means to accelerate the defrosting process.
- This equipment contains refrigerant charge. Installation of the line sets must be performed by a properly trained and EPA certified refrigeration technician aware of the dangers of dealing with refrigerant charged equipment.
- Ice machine models may contain up to 150 grams of R290 (propane) refrigerant. R290 (propane) is flammable in concentrations of air between approximately 2.1% and 9.5% by volume (LEL lower explosion limit and UEL upper explosion limit). An ignition source at a temperature higher than 470°C is needed for a combustion to occur. Refer to nameplate to identify the type of refrigerant in your equipment. To minimize the risk of ignition due to improper parts or service procedures, only refrigeration technicians with flammable refrigerant training are allowed to work on this equipment.
- All replacement parts must be like components obtained from the equipment manufacturer's authorized replacement part network.
- This equipment must be installed in accordance with the ASHRAE 15 Safety Standard for Refrigeration Systems. This equipment can not be installed in corridors or hallways of public buildings.

⚠ DANGER

Follow these precautions to prevent personal injury during use and maintenance of this equipment:

- It is the responsibility of the equipment owner to perform a Personal Protective Equipment Hazard Assessment to ensure adequate protection during maintenance procedures.
- Do Not Store Or Use Gasoline Or Other Flammable Vapors Or Liquids In The Vicinity Of This Or Any Other Appliance. Never use flammable oil soaked cloths or combustible cleaning solutions for cleaning.
- All covers and access panels must be in place and properly secured when operating this equipment.
- Risk of fire/shock. All minimum clearances must be maintained. Do not obstruct vents or openings.
- Failure to disconnect power at the main power supply disconnect could result in serious injury or death. The power switch DOES NOT disconnect all incoming power.
- All utility connections and fixtures must be maintained in accordance with the authority having jurisdiction.
- Turn off and lockout all utilities (gas, electric, water) according to approved practices during maintenance or servicing.
- Units with two power cords must be plugged into individual branch circuits. During movement, cleaning or repair it is necessary to unplug both power cords.
- Never use a high-pressure water jet for cleaning on the interior or exterior of this unit. Do not use power cleaning equipment, steel wool, scrapers or wire brushes on stainless steel or painted surfaces.
- Two or more people are required to move this equipment to prevent tipping.
- Locking the front casters after moving is the owner's and operator's responsibility. When casters are installed, the mass of this unit will allow it to move uncontrolled on an inclined surface. These units must be tethered/secured to comply with all applicable codes.
- The on-site supervisor is responsible for ensuring that operators are made aware of the inherent dangers of operating this equipment.
- Do not operate any appliance with a damaged cord or plug. All repairs must be performed by a qualified service company.

⚠ Warning

This product is hermetically sealed and contains fluorinated greenhouse gas R404A.

⚠ DANGER

Do not operate equipment that has been misused, abused, neglected, damaged, or altered/modified from that of original manufactured specifications. This appliance is not intended for use by persons (including children) with reduced physical, sensory or mental capabilities, or lack of experience and knowledge, unless they have been given supervision concerning use of the appliance by a person responsible for their safety. Do not allow children to play with, clean or maintain this appliance without proper supervision.

Table of Contents

Safety Notices

Safety Notices **3**
Definitions 3

Section 1
General Information

Model Numbers **9**
How to Read a Model Number 9
Shipping Weight 9
Accessories **9**
Bin Caster 9
Arctic Pure Water Filter System 9
Manitowoc Cleaner and Sanitizer 9
LuminIce® 9
Cleanup Procedure for Accidental Bulb Breakage 9

Section 2
Installation

Location of Ice Machine **11**
Leveling the Ice Machine 11
Electrical Service **12**
Voltage 12
Fuse/Circuit Breaker 12
Total Circuit Ampacity 12
Ground Fault Circuit Interrupter 12
Electrical Specifications 12
Water Service/Drains **13**
Water Supply 13
Water Inlet Lines 13
Drain Connections 13
Cooling Tower Applications 13
Water Supply & Drain Line Sizing Connections 13
Ice Thickness Adjustment **14**
Before Starting the Ice Machine **14**
Installation Checklist 14

Section 3
Operation

Touch Pad Features **15**
On/Off 15
Delay 15
Clean 15
Bin Full 15
Service 15
Ice Making Sequence of Operation **16**
Safety Limits 16

Section 4
Maintenance

Interior Cleaning and Sanitizing **17**
General 17
Cleaning and Sanitizing Procedures **17**
Remove Parts for Cleaning 19
Preventative Maintenance Cleaning 20
Ice Machine Inspection 20
Exterior Cleaning 20
Cleaning the Condenser 20
Removal from Service/Winterization **20**

Section 5
Troubleshooting

Checklist **21**
Safety Limit Feature **22**

Section 1
General Information

Model Numbers

This manual covers the following models:

Self-Contained Air-Cooled	Self-Contained Water-Cooled
UDF0140A	
UYF0140A	
URF0140A	
UDP0140A	
UYP0140A	
UDF0190A	
UYF0190A	
UDF0240A	UDF0240W
UYF0240A	UYF0240W
UDF0310A	UDF0310W
UYF0310A	UYF0310W
URF0310A	URF0310W
UDP0310A	
UYP0310A	

HOW TO READ A MODEL NUMBER

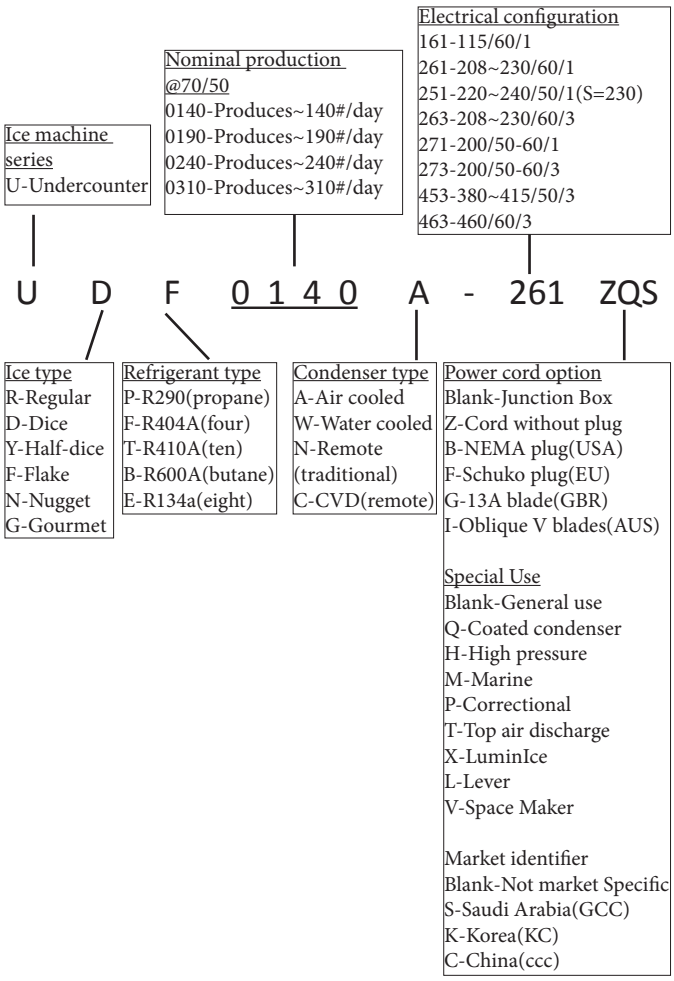

SHIPPING WEIGHT

Model Family	Shipping Weight
UF0140	153 lbs (69 kg)
UF0190	153 lbs (69 kg)
UF0240	160 lbs (73 kg)
UF0310	211 lbs (96 kg)

Accessories

Contact your Manitowoc distributor for these optional accessories:

BIN CASTER

Replaces standard legs.

ARCTIC PURE WATER FILTER SYSTEM

Engineered specifically for Manitowoc ice machines, Arctic Pure water filters are an efficient, dependable, and affordable method of inhibiting scale formation, filtering sediment, and removing chlorine taste and odor.

MANITOWOC CLEANER AND SANITIZER

Manitowoc Ice Machine Cleaner and Sanitizer are available in convenient 16 oz. (473 ml) and 1 gal (3.78 l) bottles. These are the only cleaner and sanitizer approved for use with Manitowoc products.

LUMINICE®

The LuminIce® growth inhibitor recirculates the air in the ice machine foodzone over a UV bulb. This process will inhibit the growth of common micro-organisms on all exposed foodzone surfaces.

NOTE: LuminIce® bulbs require replacement on a yearly basis.

CLEANUP PROCEDURE FOR ACCIDENTAL BULB BREAKAGE

The cleanup procedure is identical to the procedure used to clean up compact fluorescent (CFL) or fluorescent tube lights. These lights contain a small amount of mercury sealed within a glass tube. Breaking these types of lights will release mercury and mercury vapor. The broken bulb can continue to release mercury vapor until it is cleaned up and removed.

The latest EPA procedures can be viewed on their website at www.epa.gov/cfl/cflcleanup.html.

THIS PAGE INTENTIONALLY LEFT BLANK

Section 2
Installation

Location of Ice Machine

The location selected for the ice machine must meet the following criteria. If any of these criteria are not met, select another location.

- The location must be indoors.
- The location must be free of airborne and other contaminants.
- The air temperature must be at least 40°F (4°C), but must not exceed 110°F (43°C).
- The location must not be near heat-generating equipment or in direct sunlight.
- The location must be capable of supporting the weight of the ice machine and a full bin of ice.
- The location must allow enough clearance for water, drain and electrical connections in the rear of the ice machine.
- The location must not obstruct airflow through or around the ice machine (condenser airflow is in and out the front). Refer to the chart below for clearance requirements.
- The location must not be near garbage or other contaminants.
- The ice machine must use legs.

Location	Self-Contained Air-Cooled	Self-Contained Water-Cooled
Top/Sides	5 (127 mm)	5 (127 mm)
Back	5 (127 mm)	5 (127 mm)

NOTE: The ice machine may be built into a cabinet. There is no minimum clearance requirement for the top or left and right sides of the ice machine. The listed values are recommended for efficient operation and servicing only.

Series	Ice Machine Heat of Rejection*	
Ice Machine	Air Conditioning**	Peak
UF0140	2400	2900
UF0190	2200	2600
UF0240	2800	3300
UF0310	3800	6000

* B.T.U./Hour

** Because the heat of rejection varies during the ice making cycle, the figure shown is an average.

Ice machines, like other refrigeration equipment, reject heat through the condenser. It is helpful to know the amount of heat rejected by the ice machine when sizing air conditioning equipment where self-contained air-cooled ice machines are installed.

LEVELING THE ICE MACHINE

1. Screw the leveling legs onto the bottom of the ice machine.
2. Screw the foot of each leg in as far as possible.
3. Move the ice machine into its final position.
4. Level the ice machine by using a level on top of the ice machine. Turn each foot as necessary to level the ice machine from front to back and side to side.

Electrical Service

VOLTAGE

The maximum allowable voltage variation is ±10% of the rated voltage on the ice machine model/serial number plate at start-up (when the electrical load is highest).

The 115/1/60 ice machines are factory pre-wired with an 8' power cord and NEMA 5-15P-plug configuration.

The 208-230/1/60 and 230/50/1 ice machines are factory pre-wired with an 8' power cord only, no plug is supplied.

FUSE/CIRCUIT BREAKER

A separate fuse/circuit breaker must be provided for each ice machine.

TOTAL CIRCUIT AMPACITY

The total circuit ampacity is used to help select the wire size of the electrical supply.

The wire size (or gauge) is also dependent upon location, materials used, length of run, etc., so it must be determined by a qualified electrician.

GROUND FAULT CIRCUIT INTERRUPTER

Ground Fault Circuit Interrupter (GFCI/GFI) protection is a system that shuts down the electric circuit (opens it) when it senses an unexpected loss of power, presumably to ground. Manitowoc does not recommend the use of a GFCI/GFI circuit protection with our equipment. If code requires the use of a GFCI/GFI, then you must follow the local code. The circuit must be dedicated, sized properly, and there must be a panel GFCI/GFI breaker. We do not recommend GFCI/GFI outlets, as they are known for more intermittent nuisance trips than panel breakers.

ELECTRICAL SPECIFICATIONS

Ice Machine	Voltage Phase Cycle	Air-Cooled		Water-Cooled	
		Maximum Fuse/ Circuit Breaker	Total Amps	Maximum Fuse/ Circuit Breaker	Total Amps
UF0140	115/1/60	15	5.0	–	–
	208-230/1/60	15	2.5	–	–
	230/1/50	15	2.5	–	–
UF0190	115/1/60	15	6.0	–	–
	208-230/1/60	15	3.0	–	–
	230/1/50	15	2.5	–	–
UF0240	115/1/60	15	7.0	15	6.0
	208-230/1/60	15	3.5	15	3.0
	230/1/50	15	4.0	15	3.0
UF0310	115/1/60	15	10.0	15	10.0
	208-230/1/60	15	4.5	15	4.0
	230/1/50	15	4.5	–	–

Water Service/Drains

WATER SUPPLY

Local water conditions may require treatment of the water to inhibit scale formation, filter sediment, remove chlorine, and improve taste and clarity.

WATER INLET LINES

Follow these guidelines to install water inlet lines:

- Do not connect the ice machine to a hot water supply. Be sure all hot water restrictors installed for other equipment are working. (Check valves on sink faucets, dishwashers, etc.)
- If water pressure exceeds the maximum (80 psig-551.5 kPa) recommended pressure, obtain a water pressure regulator from your Manitowoc distributor.
- Install a water shut-off valve and union for both the ice-making and condenser water lines.
- Insulate water inlet lines to prevent condensation.

DRAIN CONNECTIONS

Follow these guidelines when installing drain lines to prevent drain water from flowing back into the ice machine and storage bin:

- Drain lines must have a 1.5 inch drop per 5 feet of run (2.5 cm per meter) and must not create traps.
- The floor drain must be large enough to accommodate drainage from all drains.
- Run separate bin and water-cooled condenser drain lines. Insulate them to prevent condensation.
- Vent the ice machine drain. Do not vent the condenser drain on water-cooled models.

COOLING TOWER APPLICATIONS

(Water-Cooled Models)

A water cooling tower installation does not require modification of the ice machine. The water regulator valve for the condenser continues to control the refrigeration discharge pressure.

It is necessary to know the amount of heat rejection and the pressure drop through the condenser and water valves (inlet and outlet) when using a cooling tower on an ice machine.

- Water entering the condenser must not exceed 90°F (32°C).
- Water flow through the condenser must not exceed 5 gallons (19 liters) per minute.
- Allow for a pressure drop of 7 psi (48 kPa) between the condenser water inlet and the outlet of the ice machine.
- Water exiting the condenser must not exceed 110°F (43°C).

WATER SUPPLY & DRAIN LINE SIZING CONNECTIONS

Location	Water Temperature	Water Pressure	Ice Machine Fitting	Tubing Size Up To The Ice Machine Fitting
Ice Making Water Inlet	40°F (4°C) Min. 90°F (32°C) Max.	20 psi (137.9 kPa) Min. 80 psi (551.5 kPa) Max.	3/8 Female Pipe Thread	3/8 (9.5 mm) minimum inside diameter
Condenser Water Inlet	40°F (4°C) Min. 90°F (32°C) Max.	20 psi (137.9 kPa) Min. 150 psi (1034.2 kPa) Max	3/8 Female Pipe Thread *U310 Only* 1/2 Female Pipe Thread	3/8 (9.5 mm) minimum inside diameter *U310 Only* 1/2 (12.7 mm) minimum inside diameter
Condenser Water Drain	---	---	1/2 Female Pipe Thread	1/2 (12.7 mm) minimum inside diameter
Bin Drain	---	---	1/2 Female Pipe Thread	1/2 (12.7 mm) minimum inside diameter

WATER/DRAIN CONNECTIONS

A. Potable Water Inlet

B. Drain

C. Condenser Water Inlet - (Water-cooled Only)

D. Condenser Water Outlet - (Water-cooled Only)

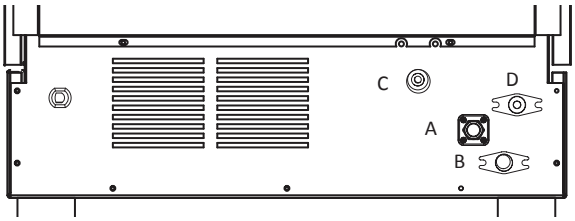

Ice Thickness Adjustment

The ice thickness can be adjusted to three levels.

1. Pull forward on the bottom of the bracket until clear of the tab.
2. Slide the bracket over the desired tab and release.
   - The center position is the normal factory setting.
   - To increase bridge thickness, raise the water level.
   - To decrease bridge thickness, lower the water level.

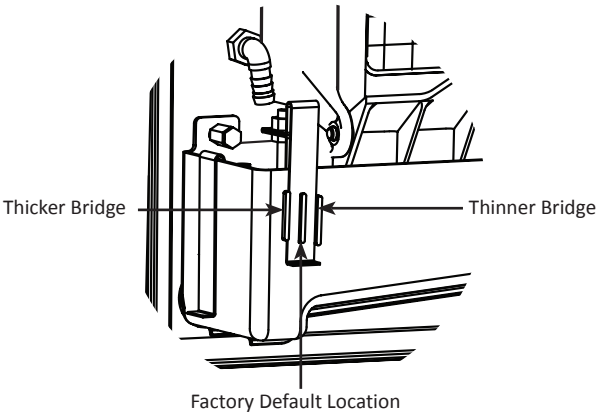

Model	Total ice weight from one cycle	
	Minimum - Maximum	Minimum - Maximum
UF0140	0.13 - 1.36 lbs	513 - 617 grams
UF0190	2.26 - 2.93 lbs	1025 - 1329 grams
UF0240	2.26 - 2.93 lbs	1025 - 1329 grams
UF0310	2.26 - 2.93 lbs	1025 - 1329 grams

Before Starting the Ice Machine

All Manitowoc ice machines are factory-operated and, normally, new installations do not require any adjustment.

Starting the ice machine and completing the Operational Checks are the responsibilities of the owner and operator.

Adjustments and maintenance procedures outlined in this manual are not covered by the warranty.

INSTALLATION CHECKLIST

√	Checklist Item
	Has the ice machine been installed where ambient temperatures will remain in the range of 40° – 110°F (4° – 43°C)?
	Has the ice machine been installed where the incoming water temperature will remain in the range of 40° – 90°F (4° – 32°C)?
	Has all of the internal packing been removed?
	Is there proper clearance around the ice machine for air circulation?
	Is the ice machine level?
	Are all electrical leads free from contact with refrigeration lines and moving equipment?
	Has the supply voltage been tested and checked against the rating on the nameplate?
	Are all electrical and water connections complete?
	Is the ice machine grounded and polarity correct?
	Is there a separate drain for the water-cooled condenser?
	Is there a separate vented drain for the bin?
	Has the On/Off button been pressed?
	Has the owner/operator completed the warranty registration card?
	Has the owner/operator been instructed regarding maintenance and the use of Manitowoc Cleaner and Sanitizer?
	Has the ice machine and bin been sanitized?

Section 3
Operation

Touch Pad Features

The touch pad offers a series of pressure sensitive buttons to control ice machine operation and provide operational status.

On/Off - Blue = Machine Is On
Off = Machine Is Off

Delay - Blue = Delay Mode Is On
Off = Delay Mode Is Off

Clean - Yellow = Clean Cycle Is On
Off = Cleaning Is Off
Flashing = Cleaning Is Paused

Bin Full - Blue = Bin Is Full
Off = Bin Is Not Full

Service - Red = Safety Limit
Off = Doesn't Need Service

ON/OFF

The On/Off Button is used to start and stop ice making. The blue light indicates whether the ice machine is Ice Making (light on) or Off (light off).

NOTE: If ice is on the evaporator (during the freeze or harvest cycle) and the On/Off button is pressed, the next cycle will have a thick slab of ice. Press the On/Off button and allow the ice to melt off the evaporator, then start a new freeze cycle.

DELAY

Pressing the Delay button will start a delay period. The ice machine will finish the freeze and harvest cycle and then start the delay period.

- Pressing the button once will start a 4 hour delay period.
- Pressing the button twice will start a 12 hour delay period.
- Pressing the button three times will start a 24 hour delay period.
- Pressing the button four times will cancel the delay periods.

NOTE: The delay period will be canceled if power is interrupted to the ice machine. When power is restored, the ice machine will remain Off.

CLEAN

Pressing the Clean button for 3 seconds with the machine off will start a clean cycle. After the clean cycle is complete, the ice machine will automatically start an ice making cycle.

- Pressing the Clean button again within 45 seconds of the clean cycle starting will abort the clean cycle.
- Pressing the On/Off button anytime during the clean cycle will de-energize the On/Off LED and the ice machine will stop after the clean cycle is complete.
- Pressing the Clean button will pause the clean cycle. The On/Off and Clean lights will flash on/off to indicate pause mode. Pressing the Clean button again will continue the clean cycle from the point of interruption.

NOTE: Opening the ice damper for 30 seconds will cancel the clean cycle.

BIN FULL

The Bin Full light energizes when the bin is full or is de-energized if the bin is not full.

SERVICE

The Service light indicates the machine needs attention.

Refer to Section 5 for more information if this light is energized.

Ice Making Sequence of Operation

NOTE: The On/Off button must be depressed and the ice damper must be closed before the ice machine will start.

Water Purge Cycle

The ice machine purges any remaining water from the water trough down the drain.

Freeze Cycle

Prechill - The refrigeration system chills the evaporator before water flow over the evaporator starts. The water inlet valve energizes during the pre-chill and remains on until the ice thickness float switch is satisfied.

Freeze - Water flowing across the evaporator cools as the freeze cycle progresses. When the water temperature reaches setpoint, the water pump will de-energize for 25 seconds, then restart. Water flowing across the evaporator will start to freeze and build ice on the evaporator. After a sheet of ice has formed, the harvest float switch signals the control board to start a harvest cycle.

Harvest Cycle

Any remaining water is purged down the drain as refrigerant gas warms the evaporator. When the evaporator warms, the sheet of cubes slides off the evaporator and into the storage bin. If all cubes fall clear of the ice damper, the ice machine starts another freeze cycle.

Full Bin Cycle

If the ice damper is held open by ice cubes, the ice machine shuts off. When the ice damper closes, the ice machine starts a new cycle at the water purge.

Control Board Timers

The control board has the following non-adjustable timers:

- The ice machine is locked into the freeze cycle for 6 minutes before a harvest cycle can be initiated.
- The maximum freeze time is 45 minutes, at which time the control board automatically initiates a harvest sequence.
- The maximum harvest time is 7 minutes. When harvest is complete the control board automatically initiates a freeze sequence.
- If the ice damper does not open and close within the 7 minute harvest cycle, the ice machine enters a water thaw cycle for 170 seconds. If the damper does not open and close within the 170 second thaw cycle, a second thaw cycle starts. The control board automatically initiates a freeze sequence when the thaw cycle(s) is complete.

SAFETY LIMITS

Safety limits are stored and indicated by the control board. The number of cycles required to stop the ice machine varies for each safety limit.

Safety limits can be reset by pressing the On/Off button and starting a new ice making cycle.

A safety limit is indicated by an energized Service Light on the touch pad. Refer to Section 5 if you receive a safety limit indication.

- Safety Limit 1 - If the freeze time reaches 45 minutes, the control board automatically initiates a harvest cycle. After 6 consecutive 45-minute freeze cycles occur, the ice machine stops.
- Safety Limit 2 - If the harvest time reaches 3.5 minutes, the control board automatically energizes the water pump and extends the harvest cycle another 3.5 minutes (7 minutes total). If the ice damper does not open and close within the 7 minute harvest cycle, the ice machine enters a water thaw cycle for 170 seconds. If the damper does not open and close within the 170 second thaw cycle, a second thaw cycle starts. The control board automatically initiates a freeze sequence when the thaw cycle(s) is complete. If 3 consecutive 7 minute harvest and thaw cycles occur, the ice machine stops.
- Safety Limit 3 - If the freeze time reaches 4 minutes and water is not sensed, the ice machine stops and initiates a 30 minute delay period. The ice machine will automatically restart at the end of the 30 minute delay period. If 100 consecutive failures occur, the ice machine stops.

Section 4
Maintenance

Interior Cleaning and Sanitizing

GENERAL

Clean and sanitize the ice machine every six months for efficient operation. If the ice machine requires more frequent cleaning and sanitizing, consult a qualified service company to test the water quality and recommend appropriate water treatment.

The ice machine must be taken apart for cleaning and sanitizing.

> ⚠ **Caution**
>
> Use only Manitowoc approved Ice Machine Cleaner and Sanitizer. Using a non Manitowoc cleaner or sanitizer may result in bodily harm and/or cause damage to the ice machine that is not covered under the warranty. Do not use cleaner or sanitizer quantities that exceed the amounts listed in this manual. Do not use these solutions in a manner inconsistent with their labeling. Read and understand all labels printed on bottles before use.

Cleaning and Sanitizing Procedures

Ice machine cleaner is used to remove lime scale and mineral deposits. Ice machine sanitizer disinfects and removes algae and slime.

Control Operation

Pressing and holding the Clean button for 3 seconds starts the clean cycle. The Clean and On/Off lights energize indicating the clean cycle has started and ice making will automatically start when the clean cycle is complete.

- Setting the ice machine to stop after the clean cycle: Press the On/Off button. The On/Off light will de-energize, indicating the ice machine will stop after the clean cycle.
- Pausing the cleaning cycle: Press the Clean button. The clean light will flash indicating the clean cycle has paused. Pressing the Clean button again will restart the clean cycle.

NOTE: If the ice damper is open for 2 seconds, the clean cycle will pause. If the damper is open for 30 seconds, the clean cycle will be canceled.

Step 1 Press the On/Off button after ice falls from the evaporator at the end of a harvest cycle. Or, press the On/Off button and allow the ice to melt off the evaporator.

Step 2 Remove all ice from the bin.

Step 3 To start a cleaning cycle, press the Clean button. Water will flow through the water dump valve and down the drain. Wait until the water trough refills, then add the proper amount of ice machine cleaner to the water trough.

Model	Amount of Cleaner
UF0140	2 ounces (60 ml)
UF0190	5 ounces (150 ml)
UF0240	5 ounces (150 ml)
UF0310	5 ounces (150 ml)

Wait until the clean cycle is complete (approximately 22 minutes) then press the On/Off button and disconnect power and water supplies to the ice machine.

Step 4 Remove parts for cleaning.

Refer to the proper parts removal for your machine. Continue with step 5 when the parts have been removed.

Step 5 Mix a solution of cleaner and warm water. Depending on the amount of mineral buildup, a larger quantity of solution may be required. Use the ratio in the table below to mix enough solution to thoroughly clean all parts.

Solution Type	Water	Mixed with
Cleaner	1 gal. (4 l)	16 oz (500 ml) cleaner

⚠ Caution

Do not immerse electrical connectors or motors for any components in water, cleaner, or sanitizer solutions.

Use half of the cleaner and water solution to clean all components. The cleaner solution will foam when it contacts lime scale and mineral deposits; once the foaming stops, use a soft bristle brush, sponge, or cloth (not a wire brush) to carefully clean the parts. Soak the parts for 5 minutes (15 – 20 minutes for heavily scaled parts). Rinse all components with clean water.

Step 6 While components are soaking, use half of the cleaner and water solution to clean all foodzone surfaces of the ice machine and bin. Use a nylon brush or cloth to thoroughly clean the following ice machine areas:

- Evaporator plastic parts – including top, bottom, and sides
- Bin bottom, sides, and top

Rinse all areas thoroughly with clean water.

Step 7 Mix a solution of sanitizer and warm water.

Solution Type	Water	Mixed With
Sanitizer	3 gal. (12 l)	2 oz (60 ml) sanitizer

Use half of the sanitizer and water solution to sanitize all removed components. Use a spray bottle to liberally apply the solution to all surfaces of the removed parts or soak the removed parts in the sanitizer and water solution. Do not rinse parts after sanitizing.

Step 8 Use half of the sanitizer and water solution to sanitize all foodzone surfaces of the ice machine and bin. Use a spray bottle to liberally apply the solution. When sanitizing, pay particular attention to the following areas:

- Evaporator plastic parts – including top, bottom, and sides
- Bin bottom, sides, and top

Do not rinse the sanitized areas.

Step 9 Apply food grade lubricant to all o-rings, then replace all removed components. Wait 10 minutes and then reapply power and water to the ice machine.

Step 10 Press the Clean button. Water will flow through the water dump valve and down the drain. Wait until the water trough refills, then add the proper amount of ice machine sanitizer to the water trough.

Model	Amount of Sanitizer
UF0140	1 ounce (30 ml)
UF0190	2 ounces (60 ml)
UF0240	2 ounces (60 ml)
UF0310	2 ounces (60 ml)

Wait until the sanitize cycle is complete (approximately 22 minutes) then press the Ice button to start ice making.

REMOVE PARTS FOR CLEANING

A. Remove the ice thickness and harvest float switch.

Pull forward on the bottom of the bracket until clear of the tab, then slide bracket upward to remove the bracket and float switch as an assembly.

NOTE: At this point, the component can easily be cleaned. If complete removal is desired, follow the wires to the bulkhead grommet (exit point) in the back wall. Pull the wire connector through the bulkhead grommet, then disconnect the wire leads from the connector.

Important

Reversing the mounting location of the ice thickness and the harvest floats will result in a safety limit 2 failure.

- The ice thickness float must be mounted to the front of the water trough and the electrical connection must be in the top bulkhead grommet.
- The harvest float must be mounted to the side of the water trough and the electrical connection must be in the bottom bulkhead grommet.
- The wire connectors for each float are different and will not allow incorrect electrical bulkhead connection.

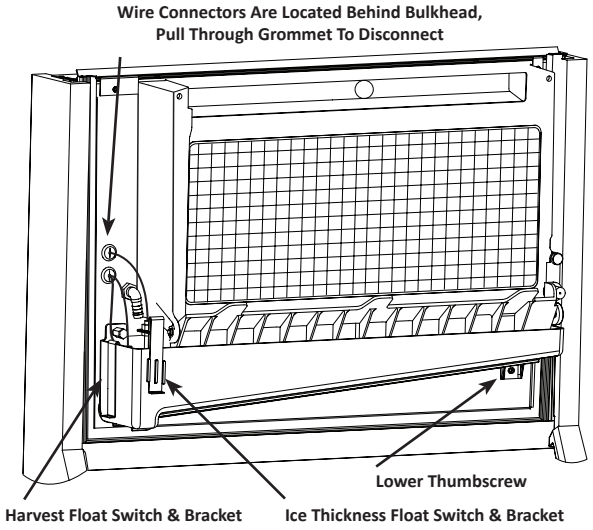

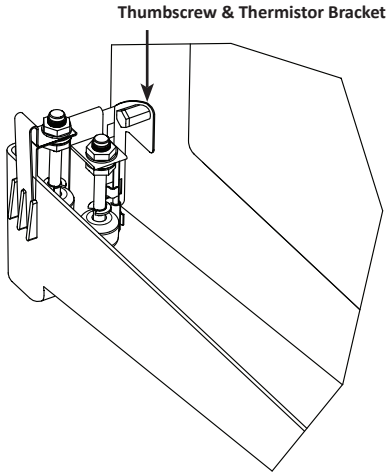

B. Remove water trough thermistor and water trough.

- While supporting the water trough, remove the upper thumbscrew and lift off the thermistor.
- Continue supporting the water trough and remove the thumbscrew from beneath the water trough.
- Remove the water trough from the bin area.

NOTE: At this point, the thermistor can easily be cleaned. If complete removal is desired, follow the wires to the bulkhead grommet (exit point) in the back wall. Pull the wire connector through the bulkhead grommet, then disconnect the wire leads from the connector.

C. Remove the ice damper and water distribution tube.

- Remove thumbscrew from bin switch cover.
- Support ice damper and then pull bin switch cover and ice damper forward to remove.
- Remove thumbscrews from the water distribution tube, then remove.

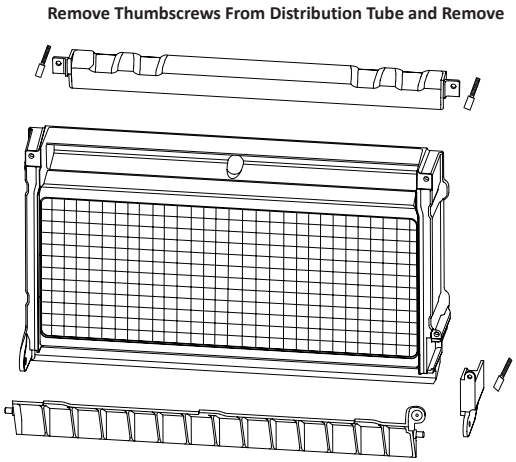

PREVENTATIVE MAINTENANCE CLEANING

This cleaning procedure can be performed between the bi-annual cleaning and sanitizing cycles. This procedure does not require removing the ice from the bin.

Step 1 Press the On/Off button after ice falls from the evaporator at the end of a Harvest cycle. Or, press the On/Off button and allow the ice to melt off the evaporator.

> ⚠ **Caution**
>
> Never use anything to force ice from the evaporator. Damage may result.

Step 2 To start a cleaning cycle, press the Clean button. Water will flow through the water dump valve and down the drain. Wait until the water trough refills, then add the proper amount of ice machine cleaner to the water trough.

Model	Amount of Cleaner
UF0140	2 ounce (60 ml)
UF0190	5 ounces (150 ml)
UF0240	5 ounces (150 ml)
UF0310	5 ounces (150 ml)

Wait until the clean cycle is complete (approximately 22 minutes) then press the On/Off button.

ICE MACHINE INSPECTION

Check all water fittings and lines for leaks. Also, make sure the refrigeration tubing is not rubbing or vibrating against other tubing, panels, etc.

Do not put anything (boxes, etc.) in front of the ice machine. There must be adequate airflow through and around the ice machine to maximize ice production and ensure long component life.

EXTERIOR CLEANING

Clean the area around the ice machine as often as necessary to maintain cleanliness and efficient operation.

Sponge any dust and dirt off the outside of the ice machine with mild soap and water. Wipe dry with a clean, soft cloth.

Clean up any fallen ice or water spills as they occur.

CLEANING THE CONDENSER

A dirty condenser restricts airflow, resulting in excessively high operating temperatures. This reduces ice production and shortens component life.

- Clean the condenser at least every six months.
- Shine a flashlight through the condenser to check for dirt between the fins.
- Blow compressed air from the inside out (opposite direction of airflow).
- If dirt still remains, call a service agent to clean the condenser.

Removal from Service/Winterization

Step 1 Clean and sanitize the ice machine.

Step 2 Press the On/Off button to turn off the ice machine.

Step 3 Turn off the water supply, disconnect and drain the incoming ice-making water line at the rear of the ice machine, and drain the water trough.

Step 4 Energize the ice machine, wait one minute for the water inlet valve to open, and blow compressed air in both the incoming water and the drain openings in the rear of the ice machine to remove all water.

Step 5 Press the On/Off button and disconnect the electric power at the circuit breaker or the electric service switch.

Step 6 Fill spray bottle with sanitizer and spray all interior food zone surfaces. Do not rinse and allow to air dry.

Step 7 Replace all panels.

Section 5
Troubleshooting

Checklist

If a problem arises during operation of your ice machine, follow the checklist below before calling service. Routine adjustments and maintenance procedures are not covered by the warranty.

Problem	Possible Cause	To Correct
Ice machine does not operate.	No electrical power to the ice machine.	Replace the fuse/reset the breaker/turn on the main switch/plug power cord into receptacle.
	Ice machine needs to be turned on.	Press the On/Off button to start ice making.
	Damper in open position (down).	Damper must be in upright position and capable of swinging freely.
Ice machine stops, and can be restarted by turning the ice machine OFF and then ON.	Safety limit feature stopping the ice machine.	Refer to “Safety Limit Feature” on the next page.
Ice sheet is thick.	Water trough level is too high.	Adjust ice thickness float.
	Power button was turned off/on during freeze cycle and ice remained on evaporator.	Allow ice to thaw and release from evaporator, then restart.
	Ice damper was opened then closed in the harvest cycle before the ice released.	Allow ice to thaw and release from evaporator, then restart.
	Long harvest cycles with repeated safety limit indication.	Call for service.
Ice machine does not release ice or is slow to harvest.	Ice machine is dirty.	Clean and sanitize the ice machine.
	Ice machine is not level.	Level the ice machine.
	Low air temperature around ice machine (air-cooled models).	Air temperature must be at least 40°F (4°C).
	Water regulating valve leaks in harvest mode (water-cooled models).	Replace water regulating valve.
Ice machine does not cycle into harvest mode.	The six-minute freeze time lock-in has not expired yet.	Wait for freeze lock-in to expire.
	Harvest float switch is dirty.	Clean and sanitize the ice machine.
	Harvest float switch wire is disconnected.	Connect the wire.
	Harvest float switch is out of adjustment.	Adjust the harvest float switch.
	Uneven ice fill (thin at top of evaporator).	See “Shallow or Incomplete Cubes” below.
Ice quality is poor (soft or not clear).	Poor incoming water quality.	Contact a qualified service company to test the quality of the incoming water and make appropriate filter recommendations.
	Water filtration is poor.	Replace the filter.
	Ice machine is dirty.	Clean and sanitize the ice machine.
	Water softener is working improperly (if applicable).	Repair the water softener.
Ice machine produces shallow or incomplete cubes, or the ice fill pattern on the evaporator is incomplete.	Ice thickness switch is out of adjustment.	Adjust the ice thickness switch.
	Water trough level is too high or too low.	Check the water level.
	Water filtration is poor.	Replace the filter.
	Hot incoming water.	Connect the ice machine to a cold water supply.
	Incorrect incoming water pressure.	Water pressure must be 20 – 80 psi (137.9 – 551.5 kPa)
	Ice machine is not level.	Level the ice machine.

Problem	Possible Cause	To Correct
Low ice capacity.	The condenser is dirty.	Clean the condenser.
	High air temperature around ice machine (air-cooled models).	Air temperature must not exceed 110°F (43°C).
	Inadequate clearance around the ice machine.	Provide adequate clearance.
	Objects stacked around ice machine, blocking airflow to condenser (air-cooled models)	Remove items blocking airflow.
	Hot incoming water.	Connect the ice machine to a cold water supply.
	Incorrect incoming water pressure. Water pressure is too low or water filter is restricted.	Water pressure must be 20 – 80 psi (137.9 – 551.5 kPa). Refer to section 2 for plumbing requirements. Replace water filter.

Safety Limit Feature

In addition to the standard safety controls, such as the high pressure cutout, your Manitowoc ice machine features built-in safety limits, which will stop the ice machine if conditions arise which could cause a major component failure.

Before calling for service, re-start the ice machine using the following procedure:

1. Press the On/Off button and turn off the ice machine, then press the On/Off button again to start the ice machine.

   A. If the safety limit feature has stopped the ice machine, it will restart after a short delay. Proceed to step 2.

   B. If the ice machine does not restart, see “Ice machine does not operate” on the previous page.

2. Allow the ice machine to run to determine if the condition is recurring.

   A. If the ice machine stops again, the condition has recurred. Call for service.

   B. If the ice machine continues to run, the condition has corrected itself. Allow the ice machine to continue running.

MANITOWOC ICE
2110 SOUTH 26TH STREET, MANITOWOC, WI 54220

844-724-2273
WWW.MANITOWOCICE.COM

WELBILT®
Bringing innovation to the table

WWW.WELBILT.COM

Welbilt provides the world's top chefs, and premier chain operators or growing independents with industry leading equipment and solutions. Our cutting-edge designs and lean manufacturing tactics are powered by deep knowledge, operator insights, and culinary expertise. All of our products are backed by KitchenCare® – our aftermarket, repair, and parts service.

- CLEVELAND
- CONVOTHERM®
- DELFIELD®
- FITKITCHEN™
- FRYMASTER®
- GARLAND
- KOLPAK®
- LINCOLN
- MANITOWOC®
- MERCO®
- MERRYCHEF®
- MULTIPLEX®

©2018 Welbilt Inc. except where explicitly stated otherwise. All rights reserved.

Part Number: 040005890 Rev 01 06/18