HOSHIZAKI

Service Manual

Steelheart Series
Refrigerated Kitchen Equipment

Models
Undercounter
Worktop
Prep Table

hoshizakiamerica.com

Number: 73217
Issued: 11-2-2018
Revision: 7-25-2019

⚠ WARNING

Only qualified service technicians should install and service the appliance. To obtain the name and phone number of your local Hoshizaki Certified Service Representative, visit www.hoshizaki.com. No service should be undertaken until the technician has thoroughly read this Service Manual. Failure to service and maintain the appliance in accordance with this manual will adversely affect safety, performance, component life, and warranty coverage. Proper installation is the responsibility of the installer. Product failure or property damage due to improper installation is not covered under warranty.

Hoshizaki provides this manual primarily to assist qualified service technicians in the service of the appliance.

Should the reader have any questions or concerns which have not been satisfactorily addressed, please call, send an e-mail message, or write to the Hoshizaki Technical Support Department for assistance.

Phone: 1-800-233-1940; (770) 487-2331
Fax: 1-800-843-1056; (770) 487-3360

E-mail: techsupport@hoshizaki.com

HOSHIZAKI AMERICA, INC.
618 Highway 74 South
Peachtree City, GA 30269
Attn: Hoshizaki Technical Support Department

Web Site: www.hoshizaki.com

NOTE: To expedite assistance, all correspondence/communication MUST include the following information:

- Model Number _____
- Serial Number _____
- Complete and detailed explanation of the problem.

IMPORTANT
This manual should be read carefully before the appliance is serviced. Read the warnings and guidelines contained in this booklet carefully as they provide essential information for the continued safe use, service, and maintenance of the appliance. Retain this booklet for any further reference that may be necessary.

CONTENTS

Important Safety Information 4
I. Construction and Refrigeration Circuit Diagram 8
A. Construction 8
B. Refrigeration Circuit Diagram 9
II. Sequence of Operation and Service Diagnosis 10
A. Sequence of Operation Flow Chart 10
1. Undercounter and Work Top: Refrigerator 10
2. Prep Table: Refrigerator 11
3. Undercounter and Work Top: Freezer 12
B. Service Diagnosis 13
1. Refrigerator/Freezer/Prep Table 14
C. Control Module Check 19
D. Thermistor Check 21
E. Cabinet Temperature Control Dial (CTCD) 22
F. Diagnostic Table 22
III. Controls and Adjustments 25
A. Temperature Settings 25
B. Defrost 25
C. Safety Devices 27
D. Perimeter and Mullion Heaters 27
IV. Refrigeration Circuit and Component Service Information 28
A. Refrigeration Circuit Service Information 30
B. Component Service Information 33
V. Preparing the Appliance for Periods of Non-Use 34
VI. Disposal 35
VII. Technical Information 36
A. Electrical and Refrigerant Data 36
B. Wiring Diagrams 37
1. Undercounter and Worktop: Refrigerator 37
2. Prep Table 38
3. Undercounter and Work Top: Freezer 39

Important Safety Information

Throughout this manual, notices appear to bring your attention to situations which could result in death, serious injury, damage to the appliance, or damage to property.

⚠ DANGER	**Indicates a hazardous situation that, if not avoided, will result in death or serious injury.**
⚠ WARNING	**Indicates a hazardous situation that, if not avoided, could result in death or serious injury.**
NOTICE	**Indicates a situation that, if not avoided, could result in damage to the appliance or property.**
IMPORTANT	**Indicates important information about the use and care of the appliance.**

⚠ DANGER

Risk of Fire or Explosion

Flammable Refrigerant Used

- Follow handling instructions carefully in compliance with U.S. government regulations.
- Do not use mechanical devices to defrost.
- Do not puncture refrigerant tubing. Risk of fire or explosion due to puncture of refrigerant tubing; follow handling instructions carefully.
- Component parts shall be replaced with like components.
- Servicing shall be done by factory authorized service personnel to minimize the risk of possible ignition due to incorrect parts or improper service.
- Consult instruction manual / service manual before attempting to install or service this product. All safety precautions must be followed.
- Dispose of properly in accordance with federal or local regulations.
- Do not place any potential ignition sources in or near the appliance.

Risque De Feu Ou D'Explosion

Le Frigorigène Est Inflammable

- Suivre attentivement les instructions de manipulation conformément à la réglementation gouvernementale.
- Ne pas utiliser d'appareils mécaniques pour dégivrer le réfrigérateur.
- Ne pas perforer la tubulure contenant le frigorigène. Risque de feu ou d'explosion si la tubulure contenant le frigorigène est perforée; suivre les instructions de manutention avec soin.
- Les pièces des composants doivent être remplacées par des pièces et accessoires équivalents.
- L'entretien doit être effectué par le personnel de service autorisé par le fabricant afin de minimiser les risques d'inflammation attribuables à l'installation d'une pièce inadéquate ou à la mauvaise exécution du service.
- Consulter le manuel du propriétaire/ guide de réparation avant de tenter une réparation. Toutes les mesures de sécurité doivent être respectées.
- Éliminer conformément aux règlements fédéraux ou locaux.
- Ne placez aucune source d'inflammation potentielle dans ou près de l'appareil.

⚠ WARNING

The appliance should be destined only to the use for which it has been expressly conceived. Any other use should be considered improper and therefore dangerous. The manufacturer cannot be held responsible for injury or damage resulting from improper, incorrect, and unreasonable use. Failure to install, operate, and maintain the appliance in accordance with this manual will adversely affect safety, performance, component life, and warranty coverage. **To reduce the risk of death, electric shock, serious injury, or fire, follow basic precautions including the following:**

- Only qualified service technicians should install and service the appliance.
- Wear appropriate personal protective equipment (PPE) when servicing the appliance.
- The appliance must be installed in accordance with applicable national, state, and local codes and regulations.
- Appliance is heavy. Use care when lifting or positioning. Work in pairs when needed to prevent injury or damage. Do not lift using the top section or the doors/drawers.
- To reduce the risk of electric shock, do not touch the plug with damp hands.
- Unplug the appliance before servicing.
- The appliance requires an independent power supply of proper capacity. See the nameplate for electrical specifications. Failure to use an independent power supply of proper capacity can result in a tripped breaker, blown fuse, damage to existing wiring, or component failure. This could lead to heat generation or fire.
- **THE APPLIANCE MUST BE GROUNDED.** The appliance is equipped with a NEMA 5-15 three-prong grounding plug to reduce the risk of potential shock hazards. It must be plugged into a properly grounded, independent 3-prong wall outlet. If the outlet is a 2-prong outlet, it is your personal responsibility to have a qualified electrician replace it with a properly grounded, independent 3-prong wall outlet. Do not remove the ground prong from the power cord and do not use an adapter plug. Failure to follow these instructions may result in death, electric shock, or fire.
- Do not use an extension cord.
- Do not use an appliance with a damaged power cord. The power cord should not be altered, jerked, bundled, weighed down, pinched, or tangled. Such actions could result in electric shock or fire. To unplug the appliance, be sure to pull the plug, not the cord, and do not jerk the cord.
- The GREEN ground wire in the factory-installed power cord is connected to the appliance. If it becomes necessary to remove or replace the power cord, be sure to connect the power cord's ground wire.
- Do not splash, pour, or spray water directly onto or into the appliance. This might cause short circuit, electric shock, corrosion, or failure.
- Do not make any alterations to the appliance. Alterations could result in electric shock, injury, fire, or damage to the appliance.
- The appliance is not intended for use by persons (including children) with reduced physical, sensory, or mental capabilities, or lack of experience and knowledge, unless they have been given supervision or instruction concerning use of the appliance by a person responsible for their safety.

⚠ WARNING, continued

- Children should be properly supervised around the appliance.
- Do not climb, stand, or hang on the appliance or doors/drawers or allow children or animals to do so. Do not climb into the appliance or allow children or animals to do so. Death or serious injury could occur or the appliance could be damaged.
- Be careful not to pinch fingers when opening and closing the doors/drawers or rail cover (prep table models) or when handling food pans. Be careful when opening and closing the doors/drawers or rail cover when children are in the area.
- Open and close the doors/drawers and rail cover (prep table models) with care. Opening the doors/drawers or rail cover too quickly or forcefully may cause injury or damage to the appliance or surrounding equipment.
- Do not use combustible spray or place volatile or flammable substances in or near the appliance. They might catch fire.
- Keep the area around the appliance clean. Dirt, dust, or insects in the appliance could cause harm to individuals or damage to the equipment.
- Do not throw anything onto the shelves or load any single shelf with more than 120 lb. (54.5 kg) of product. They might fall off and cause injury.
- Do not load any single drawer with more than 75 lb. (34 kg) of product. Depending on the weight of product in the drawers, secure the unit as necessary to prevent it from overturning. Do not open more than one drawer at a time.
- The appliance is designed only for temporary storage of food. Employ sanitary methods. Use for any other purposes (for example, storage of chemicals or medical supplies such as vaccine and serum) could cause deterioration of stored items.
- Do not block air inlets or outlets, otherwise cooling performance may be reduced.
- Do not tightly pack the cabinet. Allow some space between items to ensure good air flow. Also allow space between items and interior surfaces.
- Do not put warm or hot foods in the cabinet. Let them cool first, or they will raise the cabinet temperature and could deteriorate other foods in the cabinet or overload the appliance.
- Food storage and handling must comply with applicable codes and regulations.
- All foods should be wrapped in plastic film or stored in sealed containers. Otherwise foods may dry up, pass their smells onto other foods, cause frost to develop, result in poor appliance performance, or increase the likelihood of cross-contamination. Certain dressings and food ingredients, if not stored in sealed containers, may accelerate corrosion of the evaporator, resulting in failure.
- Do not store items near air outlets. Otherwise, items may freeze up and crack or break causing a risk of injury or contamination of other food.

⚠ WARNING, continued

Additional Warnings for Prep Table Models

- The entire rail must always be covered by rail dividers and pans (1/6 size, up to 6" (15 cm) deep). Otherwise, the appliance will not cool properly.
- Use only 1/6 size pans up to 6" (15 cm) deep. Do not use damaged pans.
- Ingredients must be pre-chilled to 37°F (3°C) or less before placing in rail.
- Keep the rail cover closed when not actively preparing food.
- The rail is for keeping ingredients cool while preparing food. If not actively preparing food for a long period such as overnight, seal pans with plastic wrap in addition to closing the rail cover. Depending on conditions, the cabinet temperature setting may need to be adjusted to prevent items from freezing. Alternatively, seal ingredients and store them in a refrigerator or freezer.

NOTICE

- Protect the floor when moving the appliance to prevent damage to the floor.
- Keep ventilation openings, in the appliance enclosure or in the built-in structure, clear of obstruction. Do not place anything on top of the appliance in an undercounter installation. There must be at least 1.5" (4 cm) overhead clearance for proper ventilation. The factory-installed rear bumpers must be in place to ensure proper rear clearance. Blockage of airflow could negatively affect performance and damage the appliance.
- Do not allow the appliance to bear any outside weight.
- To prevent deformation or cracks, do not spray insecticide onto the plastic parts or let them come into contact with oil.
- To avoid damage to the gasket, use only the door/drawer handle when opening and closing.
- To avoid damage to the top seal, do not lift the appliance by the top panel or remove the top panel.

Additional Notice for Prep Table Models

- Do not place anything on top of the rail hood or rail cover and do not lift the appliance by the rail hood or rail cover. The rail hood and rail cover are not designed to bear any outside weight.

I. Construction and Refrigeration Circuit Diagram

A. Construction

1. Undercounter, Worktop, Prep Table Common Parts

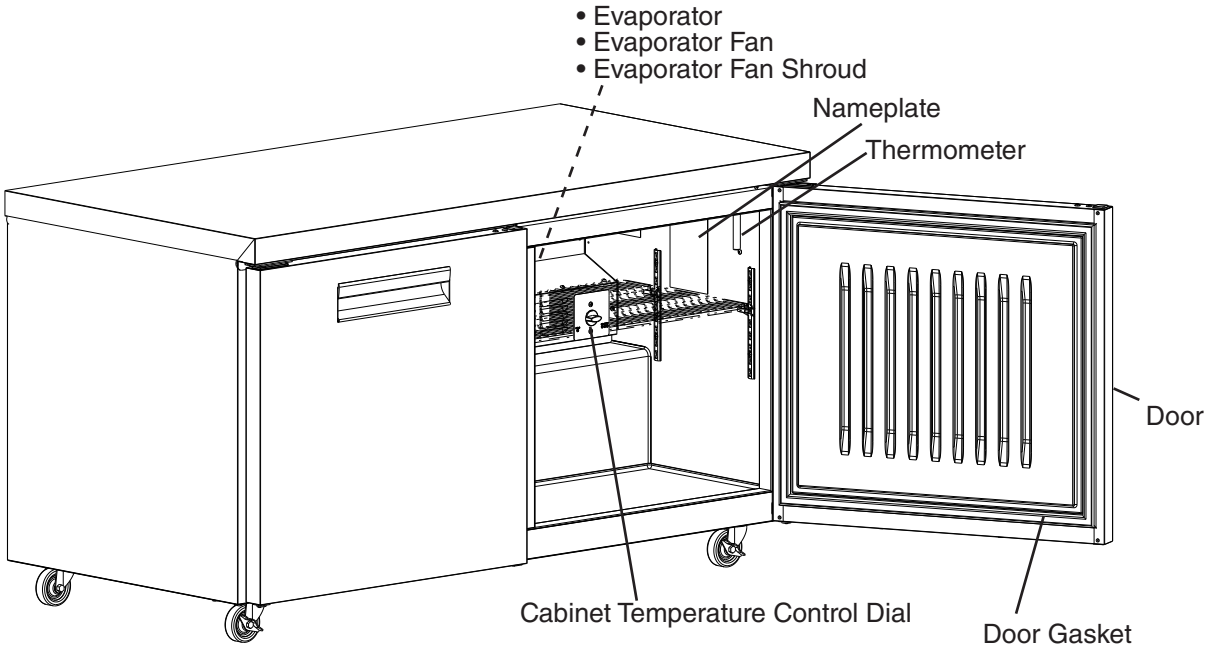

Model Shown: UF60A

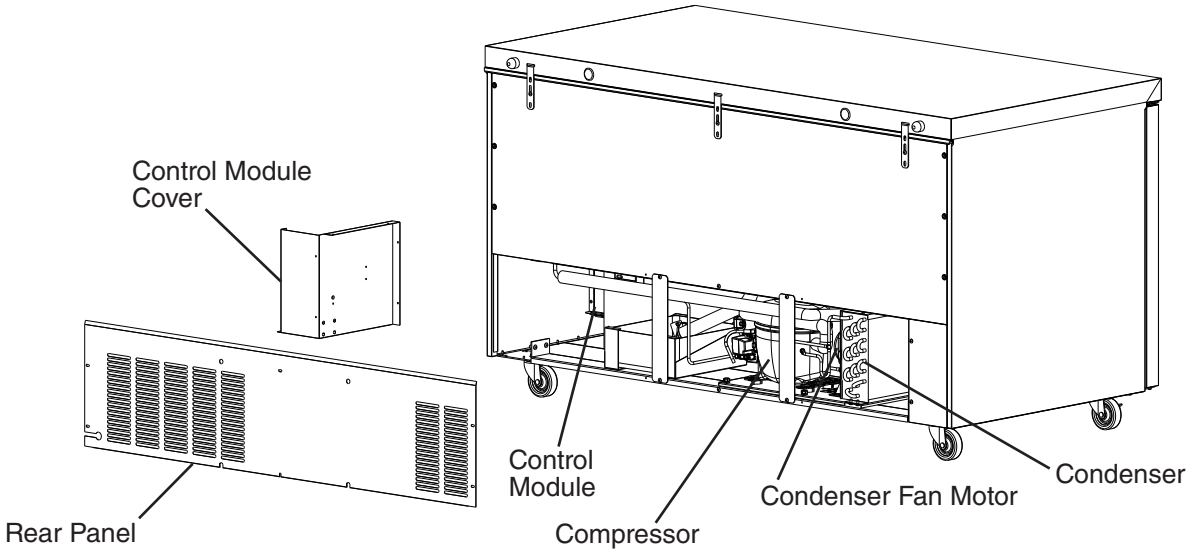

Model Shown: UF60A

B. Refrigeration Circuit Diagram

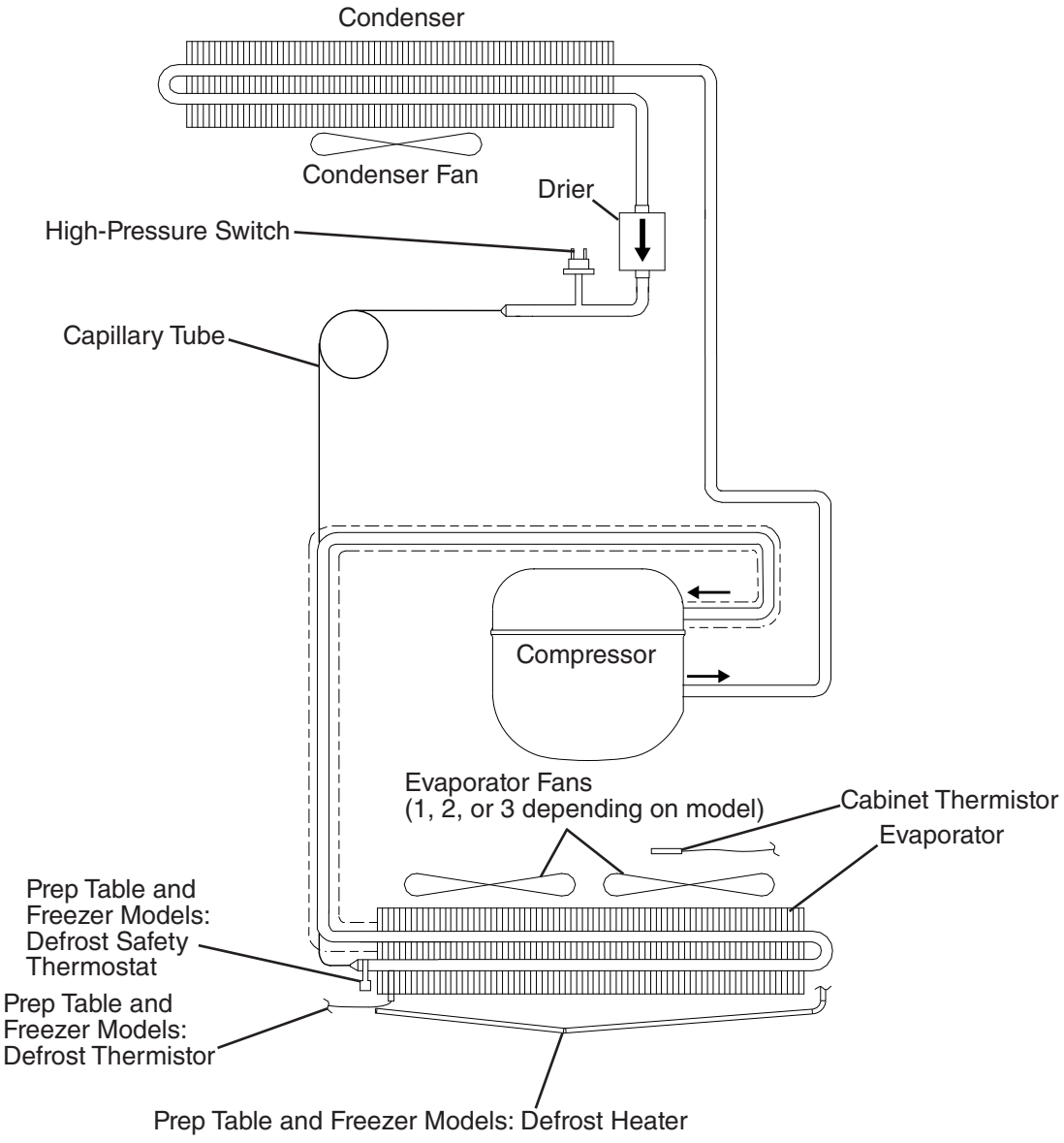

II. Sequence of Operation and Service Diagnosis

The steps in the sequence are as outlined below.

A. Sequence of Operation Flow Chart

1. Undercounter and Work Top: Refrigerator

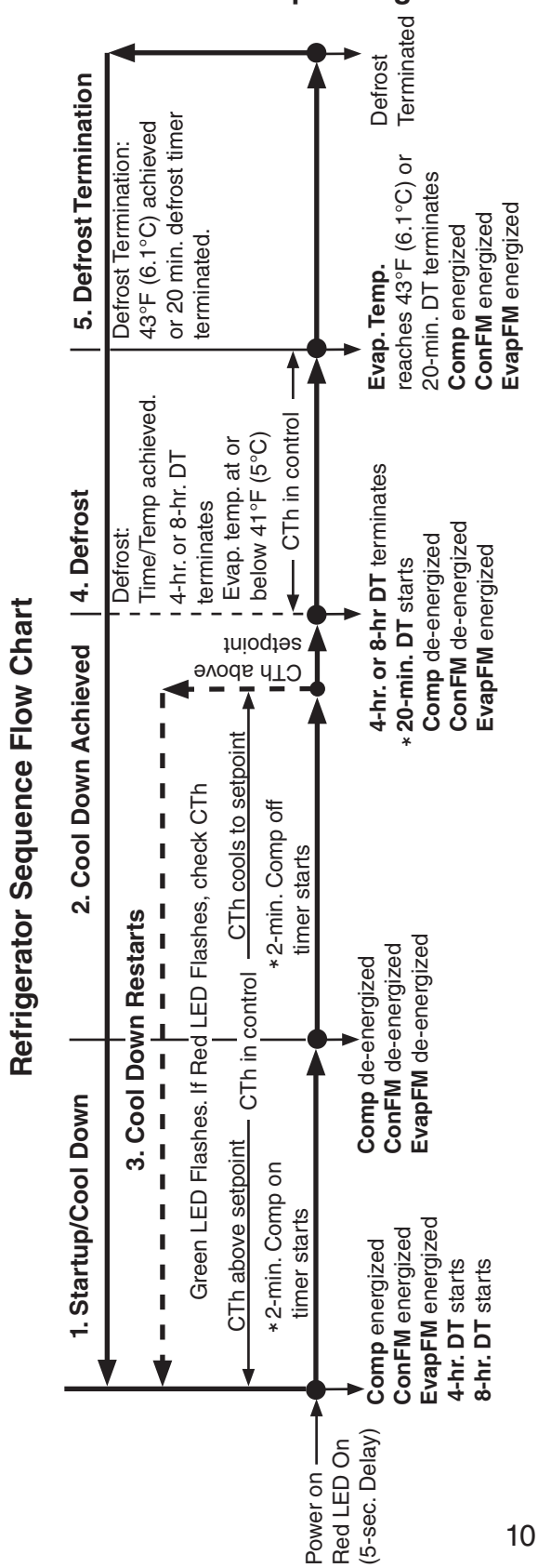

Note: * Delays
a) 2-min. minimum Comp on timer starts when Comp energizes.
b) 2-min. minimum Comp off timer starts when Comp de-energizes.
c) 20-min. defrost time.
d) If evaporator temperature raises above 41°F (10°C) during the cooling cycle, 4-hr. DT is skipped. 8-hr. DT becomes mandatory.

Legend:
Comp-compressor
ConFM-condenser fan motor
CTh-cabinet thermistor
EvapFM-evaporator fan motor

2. Prep Table: Refrigerator

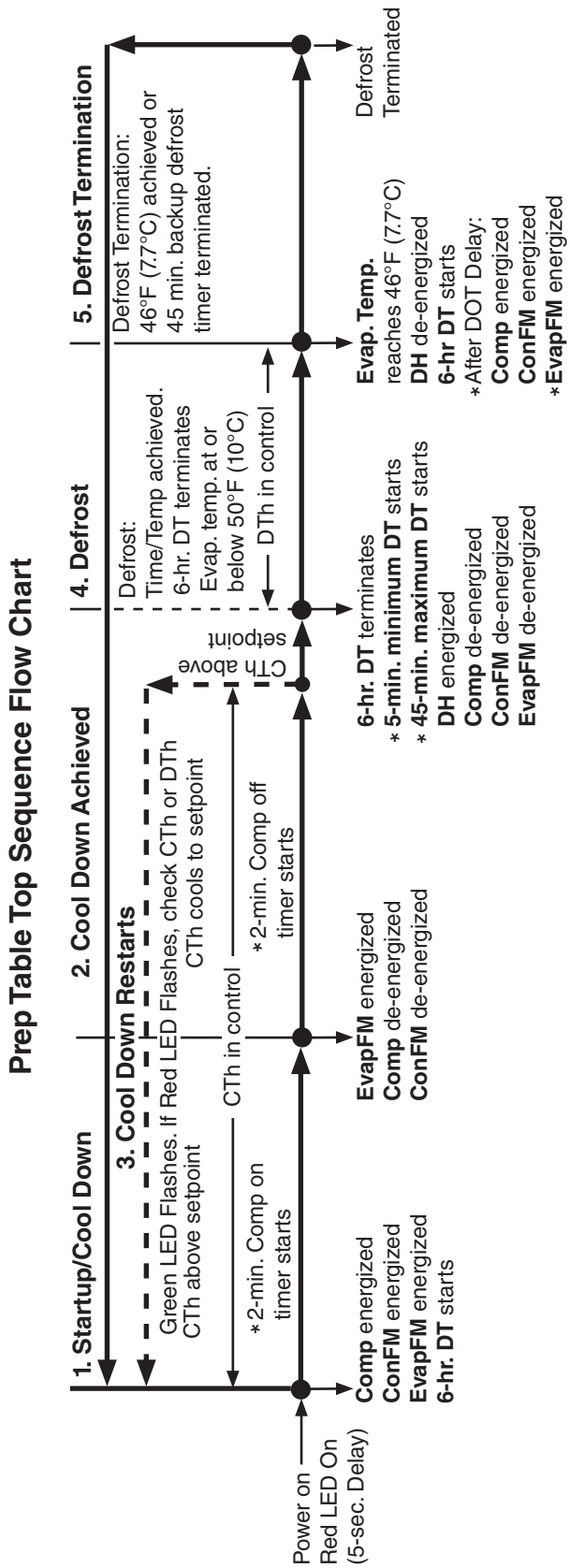

Note: * Delays

a) 2-min. minimum Comp on timer starts when Comp energizes.
b) 2-min. minimum Comp off timer starts when Comp de-energizes.
c) 5-min. minimum defrost time.
d) 45-min. maximum defrost time.
e) DOT (drip off time) 1-min. Comp/ConFM delay timer starts when defrost termination temperature is met (drip off time (DOT)).
f) If evaporator temperature raises above 50°F (10°C) during the cooling cycle, 6-hr. DT resets.

Legend:
Comp-compressor
ConFM-condenser fan motor
CTh-cabinet thermistor
DH-defrost heater
DT-defrost timer
DTh-defrost thermistor
EvapFM-evaporator fan motor

3. Undercounter and Work Top: Freezer

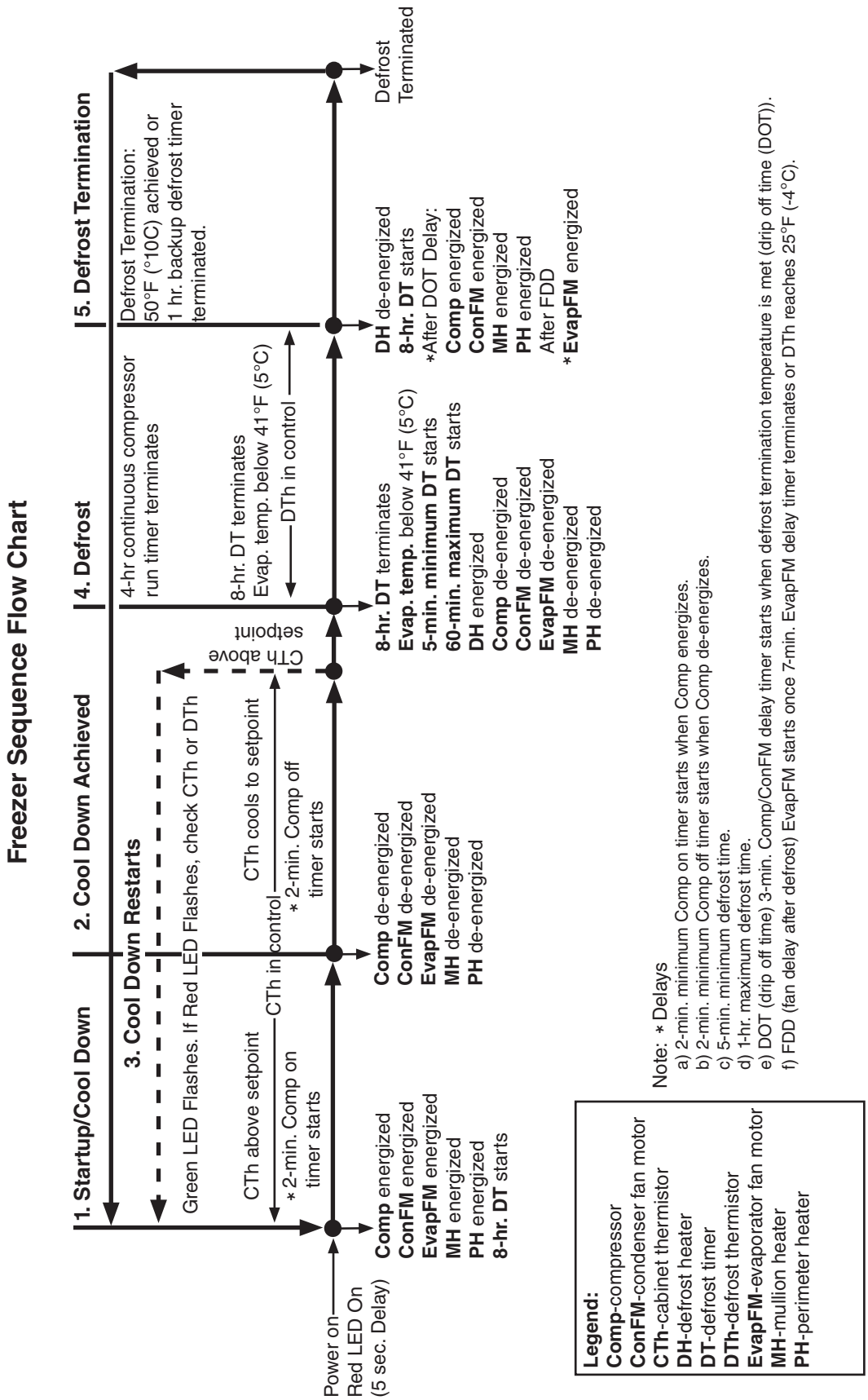

B. Service Diagnosis

⚠ DANGER

Risk of Fire or Explosion

Flammable Refrigerant Used

- Follow handling instructions carefully in compliance with U.S. government regulations.
- Do not use mechanical devices to defrost.
- Do not puncture refrigerant tubing. Risk of fire or explosion due to puncture of refrigerant tubing; follow handling instructions carefully.
- Component parts shall be replaced with like components.
- Servicing shall be done by factory authorized service personnel to minimize the risk of possible ignition due to incorrect parts or improper service.
- Consult instruction manual/service manual before attempting to install or service this product. All safety precautions must be followed.
- Dispose of properly in accordance with federal or local regulations.
- Do not place any potential ignition sources in or near the appliance.

Risque De Feu Ou D'Explosion

Le Frigorigène Est Inflammable

- Suivre attentivement les instructions de manipulation conformément à la réglementation gouvernementale.
- Ne pas utiliser d'appareils mécaniques pour dégivrer le réfrigérateur.
- Ne pas perforer la tubulure contenant le frigorigène. Risque de feu ou d'explosion si la tubulure contenant le frigorigène est perforée; suivre les instructions de manutention avec soin.
- Les pièces des composants doivent être remplacées par des pièces et accessoires équivalents.
- L'entretien doit être effectué par le personnel de service autorisé par le fabricant afin de minimiser les risques d'inflammation attribuables à l'installation d'une pièce inadéquate ou à la mauvaise exécution du service.
- Consulter le manuel du propriétaire/ guide de réparation avant de tenter une réparation. Toutes les mesures de sécurité doivent être respectées.
- Éliminer conformément aux règlements fédéraux ou locaux.
- Ne placez aucune source d'inflammation potentielle dans ou près de l'appareil.

⚠ WARNING

- The appliance should be diagnosed and repaired only by qualified service personnel to reduce the risk of death, electric shock, serious injury, or fire.
- Wear appropriate personal protective equipment (PPE) when servicing the appliance.
- Risk of electric shock. Use extreme caution and exercise safe electrical practices.
- Moving parts (e.g., fan blade) can crush and cut. Keep hands clear.
- Appliance is heavy. Use care when lifting or positioning. Work in pairs when needed to prevent injury or damage.
- Make sure all food zones are clean after the appliance is serviced.

1. Refrigerator/Freezer/Prep Table

The diagnostic procedure is a sequence check that allows you to diagnose the electrical system and components. Before proceeding, check for correct installation and proper voltage per nameplate.

See the table for default cabinet temperature control dial settings.

Model	Default Cabinet Temperature Control Dial Setting	Approximate Default Temperature
Undercounter Worktop	Between 4 and 5	Refrigerator: 34°F (1°C) Freezer: -5°F (-21°C)
Prep Table	Between 4 and 5	34°F (1°C)

The diagnostic procedure is a sequence check that allows you to diagnose the electrical system and components. Before proceeding, check for correct installation and proper voltage per nameplate.
Confirm that the appliance location meets factory requirements:

- This appliance is not intended for outdoor use. Normal operating ambient temperature should be within 45°F to 86°F (7°C to 30°C).
- The appliance should not be located next to ovens, grills, or other high heat producing equipment. Check CM using the steps in "II.C. Control Module Check."

Note:
- When checking voltage (115VAC), always choose a neutral white (W) wire to establish a good neutral connection.
- Control module has high and low voltage protection. If off on either protection, no LED is visible and all components are off.
  High Voltage: 135VAC
  Low Voltage: 90VAC
- Solid red LED for 5 sec. at startup.
- Flashing green LED: Normal operation.
- Flashing red LED: check cabinet thermistor and defrost thermistor (if applicable).
- Control module has a 2 min. minimum on time and 2 min. minimum off time for Comp.

1) Unplug the appliance from the electrical outlet.
2) Remove the rear panel.
3) Plug the appliance back into the electrical outlet. If appliance was in defrost when power supply was disconnected, defrost is terminated and normal cooling cycle begins when power supply is reconnected.
4) **Startup/Cool Down–**There is a slight delay (solid red LED for 5 sec., then flashing green LED). Temperature above setpoint at CTh and if applicable, confirm appliance is not in a defrost cycle (PT and Freezers). Comp, CondFM, and EvapFM energize. 2-min. Comp on timer starts.
   Freezers: PH and MH energize.
   a) **CTh Diagnosis**: If CTh fails, a red LED flashes along with the green LED on the CM. Confirm CTh is properly connected to CM. Check Ohm reading of CTh. See "II.D. Thermistor Check." Replace as needed.

b) **CTCD Diagnosis**: Confirm CTCD is set between 4 and 5. Check Ohm reading of CTCD. See "II.E) Cabinet Temperature Control Dial (CTCD)."

c) **CM Diagnosis**: Confirm green LED is flashing. If not, check for 115VAC between CM 2 (L) black (BK) wire and CM 3 (N) neutral white (W) wire. If 115VAC is not present, check power cord connections and breaker/fuse. Confirm wiring connections are secure for both CM 2 (L) black (BK) (power supply) and CM 3 (N) white (W) (neutral). If 115VAC is present and green LED is not flashing, replace CM.

d) **Comp/CondFM Diagnosis**: Check that Comp and ConFM energize. Next, check for 115VAC at CM 1 (C) brown (BR) wire to neutral white (W) wire. If 115VAC is not present at CM 1 (C) (BR) to neutral (W), check CTh status. See "II.D. Thermistor Check." If CTh ohm reading is in proper range, replace CM. If 115VAC is present, check HPS continuity (if applicable). See "f) HPS Activation" below.
Comp: If 115VAC is present, check Comp external overload, start cap, start relay, and Comp motor windings. Replace as needed.
CondFM: If 115VAC is present, check fan blade for binding, then check ConFM motor windings.

e) **EvapFM Diagnosis**: Check that EvapFM(s) energize. If not, check for 115VAC at CM 5 (F) dark blue (DBU) wire to neutral white (W) wire. If 115VAC is not present, replace CM. If 115VAC is present, check fan blades for binding, then check EvapFM motor windings.

f) **HPS Activation:** Check continuity of HPS. If open, allow time for system pressure to equalize and HPS to reset. If HPS does not reset, replace HPS and diagnose reason for HPS activation. Confirm ConFM is energized and fan blade turns freely. Check that the condenser coil is not clogged or restricted. Check that there are no restrictions in the refrigeration circuit (drier).

g) **PH and MH Diagnosis (Freezer only)**: PH and MH follow Comp operation. When Comp is energized, PH and MH are energized. If 115VAC is present, check amp draw of PH and MH. If an amp reading is not present, check the continuity of PH and MH. If defective, replace PH or MH.

If Comp, ConFM, and EvapFM are energized and the cabinet does not cool down, check for a restriction in the refrigeration circuit, low refrigerant charge, or inefficient Comp.

5) **Cool Down Achieved**–Temperature cools to setpoint. Comp and ConFM de-energize.
UC/WT Refrigerators and Freezers: EvapFM de-energizes.
Prep Table: EvapFM continues.
Diagnosis: If temperature setpoint achieved and Comp, ConFM, and EvapFM (except PT models) does not de-energize, check CTh and CTCD continuity.
See "II.D. Thermistor Check." and "II.E) Cabinet Temperature Control Dial (CTCD)."
If CTh or CTCD is defective, replace. If CTh and CTCD are good and either the Comp, ConFM, and/or EvapFM (except PT models) continue, or if EvapFM on PT models de-energizes, replace CM.

6) **Defrost–**Manually initiated defrost, off cycle defrost, and time-initiated temperature-terminated heated defrost.

1a) **Manually-Initiated (All)**: Turn the CTCD all the way to the right. Wait 1 to 3 sec. then back to original setting. Defrost initiated. If defrost does not initiate, wait 1 to 2 min. and repeat process. Note: When refrigerator defrost is manually-initiated EvapFM continues.

1b) **Off Cycle-Inititiated:** Off cycle between cooling cycles. CTh cools below CTCD. Setting satisfied. Comp and CondFM de-energize. EvapFM energizes.

1c) **Time/Temperature-Initiated:**

(1) **Refrigerator**: 4-hr. defrost interval timer terminates. Control module checks CTh. If CTh is at or below 41°F (5°C), defrost starts. If in defrost, Comp and CondFM de-energize. EvapFM continues. 20-min. DT starts. If CTh is above 41°F (5°C), defrost is delayed for 4 hrs. (8-hr. defrost interval timer). Once the 8-hr. defrost interval timer terminates, defrost starts regardless of evaporator temperature.

(2) **Prep Table**: 6-hr. defrost timer terminates. Control module checks DTh. If DTh is at or below 50°F (10°C), defrost starts. If in defrost, Comp, CondFM, and EvapFM de-energize. DH energizes. 5-min. minimum DT starts and 45-min. maximum DT starts. If DTh is above 50°F (10°C), defrost will not initiate.

(3) **Freezer**: 8-hr. defrost timer terminates. Control module checks DTh. If DTh is at or below 41°F (5°C), defrost starts. If in defrost, Comp, ConFM, PH, MH, and EvapFM de-energize. DH energizes. 5-min. minimum DT starts and 1-hr maximum DT starts. If DTh is above 41°F (5°C), defrost will not initiate.

2a) **Manually-Terminated**: Turn the CTCD all the way to the right. Wait 1 to 3 sec. then back to original setting. Defrost terminated. If DH continues or Comp does not energize, make several more attempts of manual termination.

2b) **Temperature or Time-Terminated**: CTh (Refrigerator) or DTh (PT and Freezers) achieves termination temperature or backup DT terminates.

(1) **Refrigerator**: 43°F (6.1°C) achieved or 20-min. backup DT terminates. If CTh calling for cooling, Comp and CondFM energize. EvapFM continues.

(2) **Prep Tables**: 46°F (7.7°C) achieved or 45-min. backup DT terminates. DH de-energizes. If CTh calling for cooling, 1-min. Comp delay timer starts (drip time). 1-min. Comp delay timer terminates. Comp, ConFM, and EvapFM energize.

(3) **Freezers**: 50°F (10°C) achieved or 1-hr. backup DT terminates. DH de-energizes. If CTh calling for cooling, 3-min. Comp delay timer starts (drip time) and 7-min. EvapFM delay timer starts. 3-min. Comp delay timer terminates. Comp and ConFM energize. 4 min. later, 7-min. EvapFM delay timer terminates and EvapFM energizes.
Note: If DTh achieves 25°F before 7-min. EvapFM delay timer terminates, 7-min. EvapFM delay timer terminates and EvapFM energizes.

Defrost Diagnosis:

1) ***Manual-Initiation***: CTCD rotated to max. position and back. Refrigerator: 4-hr min. or 8-hr max., Prep Table: 6-hr., or Freezer: 8-hr. DT terminates. After rotating CTCD several times and defrost still not activated, wait 1 to 2 min. and repeat process. Replace CTCD as needed.
   (1) **CM Diagnosis**: Confirm DH energizes (if applicable) and Comp, ConFM, and EvapFM (if applicable) de-energize. If not, replace CM.
   (2) **Comp and ConFM Diagnosis**: Confirm Comp and ConFM de-energize. If not, check for 115VAC at CM 1 (C) (BR) to neutral (W). If 115VAC is present, Check DTh continuity. See "II.D. Thermistor Check." Replace as needed. If DTh confirmed, replace CM.
   (3) **EvapFM (if applicable)**: Confirm EvapFM de-energizes. If not, check for 115VAC at CM 5 (F) (DBU) to neutral (W). If 115VAC is present, confirm Comp and ConFM de-energized. Next, check DTh continuity. See "II.D. Thermistor Check." Replace as needed. If DTh confirmed, replace CM.
2) ***Off-Cycle Defrost:*** Off cycle defrost. Has CTh warmed above temperature setpoint? If not, confirm CTh continuity. See "II.D. Thermistor Check." Replace as needed. If CTh confirmed, replace CM.
3) ***Defrost Diagnosis: Initiation:*** Confirm Comp is energized, then manually initiate defrost. Rotate CTCD all the way to the right. Wait 1 to 5 sec. then rotate back to original setting. Defrost initiated.
   a) **UC/WT Refrigerator:** Check that Comp and ConFM de-energize. EvapFM continues.
   b) **Prep Table**: Check that Comp, ConFM, and EvapFM de-energize. DH energizes.
   c) **Freezer**: Check that Comp, ConFM, PH, MH, and EvapFM de-energize. DH energizes.
      (1) **CTCD**: If Comp and ConFM continue, wait 1 to 2 min. and make several more attempts of manual initiation. If manual initiation fails, replace CTCD.
      (2) **CM**: If CTCD confirmed and Comp and ConFM continue, replace CM.
      (3) **DH**: If Comp and ConFM de-energize, check that DH energizes. Check for 115VAC at CM 4 (H) (R) to CM 3 (N) (W). If 115VAC is not present, replace CM. If 115VAC is present, and DH is not energized, check for 115VAC at DST black (BK) wire to any neutral white (W) wire. If 115VAC is not present, DST is open. Let cool and reset. If DST does not reset (close), replace DST. If 115VAC is present, check continuity of DH. Replace as needed.

4) ***Defrost Diagnosis: Termination***;

a) **UC/WT Refrigerator:** CTh warms to 43°F (6.1°C). Confirm continuity of CTh. See "II.D. Thermistor Check." Replace as needed. If CTh confirmed, replace CM.

b) **Prep Table**: DTh warms to 46°F (7.7°C). DH de-energizes. Confirm continuity of DTh. See "II.D. Thermistor Check." Replace as needed. If DTh is good and DH continues after DTh achieves 46°F (7.7°C), replace CM.

c) **Freezer**: DTh warms to 50°F. (10°C) DH de-energizes. Confirm continuity of DTh. See "II.D. Thermistor Check." Replace as needed. If DTh is good and DH continues after DTh achieves 50°F (10°C), replace CM.

Legend: **Comp**–compressor; **ConFM**–condenser fan motor; **CM**–control module; **CTh**–cabinet thermistor; **DH**–defrost heater; **DST**–defrost safety thermostat; **DT**–defrost timer; **DTh**–defrost thermistor; **EvapFM**–evaporator fan motor; **HPS**–high-pressure switch; **MH**–mullion heater; **PH**–perimeter heater; **CTCD**–cabinet temperature control dial

C. Control Module Check

1. Control Module

Before replacing a CM that does not show a visible defect and that you suspect is bad, conduct the following check procedure. This procedure will help you verify your diagnosis. Always choose a neutral (W) to establish a good power supply and neutral connection to CM: 115VAC at CM 2 (L) (BK)

2. Startup/Cool Down

At startup, CM displays a solid red LED for 5 sec. After 5 sec. CM turns red LED off and begins flashing a green LED. This is normal operation. If a red LED flashes (fault code), check CTh or DTh for continuity and good connection to CM. See "II.D. Thermistor Check."

1) Check all wiring connections.
2) Be sure the power supply is connected to the electrical outlet.
3) Confirm the CTh and DTh are properly connected (no red LED flashing). A Red LED turns on for 5 sec. at startup. After 5 sec. the red LED turns off and a green LED starts flashing. This is normal operation. If the red LED starts flashing, check CTh and DTh continuity. Replace as needed.
4) Check that Comp, ConFM, EvapFM, PH and MH (freezers) energize. If not check CTh status. See "II.D. Thermistor Check." If CTh ohm reading is in proper range,
   Comp and ConFM and PH and MH (freezers); check for 115VAC at CM 1 (C) (BR) to neutral white (W). If 115VAC is not present, replace CM. If 115VAC is present and Comp energized and ConFM did not, check ConFM blades for binding and motor winding continuity. If PH or MH (freezers) does not energize, check continuity, replace as needed.
   EvapFM; Check for 115VAC at CM 5 (F) (DBU) to neutral white (W). If 115VAC is not present, replace CM. If 115VAC is present, check EvapFM blades for binding and motor winding continuity.

3. Defrost initiation

5) **Manual Defrost Check:** Turn the CTCD all the way to the right. Wait 1 to 3 sec. then back to original setting. Defrost initiated. If Comp and ConFM continue, wait 1 to 2 min. and repeat process of manual initiation. If Comp remains energized, replace CM.
6) Confirm Comp, ConFM, EvapFM (continues on refrigerators), PH and MH (freezers) de-energize. If not, for Comp, ConFM and PH and MH (freezers), check for 115VAC at CM 1 (C) (BR) to neutral white (W) wire and for EvapFM CM 5 (F) (DBU) to neutral white wire (W). If 115VAC is present, replace CM.
7) **Heated Defrost**: Confirm DH energizes. Check for 115VAC at CM 4 (H) (R) to neutral white (W) wire. If 115VAC is not present, replace CM.

4. Defrost Termination

8) Check that all components restart after defrost termination.

a) **UC/WT Refrigerator**: CTh warms to 43°F (6.1°C). Confirm continuity of CTh. See "II.D. Thermistor Check." Replace as needed. If CTh confirmed, replace CM.

b) **Prep Table**: DTh warms to 46°F (7.7°C). DH de-energizes. Confirm continuity of DTh. See "II.D. Thermistor Check." Replace as needed. If DTh is good and DH continues after DTh achieves 46°F (7.7°C), replace CM.

c) **UC/WT Freezer:** DTh warms to 50°F (10°C). DH de-energizes. Confirm continuity of DTh. See "II.D. Thermistor Check." Replace as needed. If DTh is good and DH continues after DTh achieves 50°F (10°C), replace CM.

Legend: **Comp**–compressor; **ConFM**–condenser fan motor; **CM**–control module; **CTCD**–cabinet temperature control dial; **CTh**–cabinet thermistor; **DH**–defrost heater; **DTh**–defrost thermistor; **EvapFM**–evaporator fan motors, **MH**–mullion heater; **PH**–perimeter heater

D. Thermistor Check

The cabinet thermistor works in conjunction with cabinet temperature control dial (CTCD) to control cabinet temperature. The defrost thermistor is used for defrost initiation, defrost cycle termination, and evaporator fan motor control.

- Prep Table: Defrost initiation is below 50°F (10°C).
  Defrost termination is 46°F (6.6°C).
- Freezer: Defrost initiation is below 41°F (5°C).
  Defrost termination is 50°F (10°C).
- Prep Table: Evaporator fan motor initiation after defrost is 1-min.
  Evaporator fan motor delay timer terminates.
- Freezer: Evaporator fan motor initiation after defrost is 25°F (-4°C) or 7-min. Evaporator fan motor delay timer terminates.

Thermistor resistance varies depending on temperature. The control module monitors the thermistors and cabinet temperature control dial (CTCD) to control system operation. No adjustment is required.

To check thermistor resistance, follow the steps below.

1) Unplug the appliance.
2) Remove the evaporator shroud and rear louver.
3) Remove the thermistor in question, then immerse the thermistor sensor portion in a glass containing ice and water for 2 to 3 min.
4) Disconnect the thermistor connector from the control module.
5) Check the resistance between the wires at the thermistor connector. Normal reading is within 16.0 to 16.7 kΩ. If outside the normal reading, replace the thermistor.
6) Reconnect and replace the thermistor and thermistor connector in their correct positions. Note: After working with or around the defrost thermistor on a prep table or freezer, make sure the defrost thermistor wire is not touching the defrost heater.
7) Replace the evaporator shroud and rear louver.
8) Plug the appliance back in.

E. Cabinet Temperature Control Dial (CTCD)

The cabinet temperature control dial (CTCD) works in conjunction with the cabinet thermistor to control cabinet temperature. The warmest setting is 1 and the coldest setting is 7. The default CTCD setting is between 4 and 5. CTCD resistance varies depending on temperature. No adjustment is required.

1) Unplug the appliance.
2) Set the CTCD setting to 4.
3) Remove the rear louver.
4) Disconnect the CTCD connector from the control module.
5) Check the resistance between the black (BK) wire and the white (W) wire at the CTCD connector. The CTCD reading at setting 4 should be 2.7 kΩ. If outside of this reading, replace the CTCD.
6) Reconnect the CTCD connector in its correct position.
7) Replace the rear louver in it correct position.
8) Plug the appliance back in.

Legend: **CTCD**–cabinet temperature control dial

F. Diagnostic Table

Before consulting the diagnostic tables, check the following:

- Check the cabinet temperature control dial setting. See the table for default cabinet temperature control dial settings.

Model	Default Cabinet Temperature Control Dial Setting	Approximate Default Temperature
Undercounter Worktop	Between 4 and 5	Refrigerator: 34°F (1°C) Freezer: -5°F (-21°C)
Prep Table	Between 4 and 5	34°F (1°C)

- Make sure the doors are not left open or opened too often and that they are sealing properly.
- On prep tables, pans and rail dividers must be in place. Otherwise, the rail will not cool properly.
- Make sure product is not blocking airflow and that the cabinet is not overloaded with warm or hot product. Product should be allowed to cool before putting in the appliance. On prep tables, only load ingredients that have been pre-chilled to 37°F (3°C) or less.
- Check for correct installation and proper voltage per appliance nameplate. This appliance is not intended for outdoor use. Normal operating ambient temperature:
  – Refrigerators and Solid Door Freezers 45°F to 100°F (7°C to 38°C)
  – Prep Table 45°F to 86°F (7°C to 30°C)
- The appliance should not be located next to ovens, grills, or other high heat producing equipment. A minimum of 1.5" (38 mm) overhead clearance is required for proper ventilation.

1. Appliance Not Cooling

Appliance Not Cooling - Possible Cause	
1. Power Supply	a) Unplugged, blown fuse, or tripped or defective circuit breaker.
	b) Loose connection.
	c) Not within specifications.
2. Power Supply Cord and Plug	a) Loose connection.
	b) Defective.
3. Wiring	a) Loose connection or open.
	b) Faulty.
4. Cabinet Thermistor	a) Loose, disconnected, or defective.
5. Cabinet Temperature Control Dial	a) Loose, disconnected, or defective.
6. Control Module	a) Control module in alarm (red LED flashing). If applicable.
	b) Control module defective. If applicable.
7. Evaporator Fan Motor	a) Defective.
	b) Fan blade binding.
8. Condenser Fan Motor	a) Defective.
	b) Fan blade binding.
9. Compressor External Protector	a) Dirty condenser.
	b) Condenser fan motor not operating.
	c) Defective.
	d) Start relay defective.
	e) Low charge.
	f) Start capacitor (if applicable) defective.
10. Compressor	a) Defective.
11. Condenser	a) Dirty.
12. Evaporator	a) Dirty or frozen up.
13. Refrigerant/Refrigerant Lines	a) Gas leak.
	b) Refrigerant lines or components restricted.
14. High-Pressure Switch (if applicable)	a) Dirty condenser.
	b) Ambient temperature too warm.
	c) Condenser fan motor not operating.
	d) Refrigerant overcharge.
	e) Refrigerant lines or components restricted.
	f) Bad contacts.

2. Evaporator is Frozen Up

Evaporator is Frozen Up - Possible Cause	
1. Evaporator	a) Dirty.
2. Evaporator Fan Motor	a) Defective.
	b) Fan blade binding.
3. Refrigerant Charge	a) Low.
4. Defrost Heater (if applicable)	a) Defective.
5. Control Module	a) Defective.
6. Defrost Safety Thermostat Open (if applicable)	a) Defective.

3. Defrost

Refrigerator Defrost Fails to Initiate - Possible Cause	
1. Control Module	a) Defective (4-hr. or 8-hr. DT fails to terminate or CM fails to read CTh)
Prep Table Defrost Fails to Terminate - Possible Cause	
1. Defrost Thermistor (Confirm DTh status. See "II.D. Thermistor Check.")	a) Defrost termination temperature 43°F (6.1°C) not achieved or 20-min. backup DT fails to terminate.
	b) Defective.
3. Control Module	a) Cabinet thermistor connection loose.
	b) Defective.
Prep Table Defrost Fails to Initiate - Possible Cause	
1. Control Module	a) Defective (6-hr. DT fails to terminate or CM fails to read DTh)
2. Defrost Safety Thermostat	a) Open. Cut-out: 120°F±5°F (49°C±3°C), Cut-in: 70°F±5°F (21C±3°C)
Prep Table Defrost Fails to Terminate - Possible Cause	
1. Defrost Heater	a) Defrost safety thermostat open.
	b) Defective.
2. Defrost Thermistor (Confirm DTh status. See "II.D. Thermistor Check.")	a) Defrost termination temperature 46°F (7.7°C) not achieved or 45-min. backup DT fails to terminate.
	b) Defective.
3. Control Module	a) Defrost thermistor connection loose.
	b) Defective.
Freezer Defrost Fails to Initiate - Possible Cause	
1. 4-hr. compressor continuous run time defrost timer terminated.	a) Check compressor operation. See "1. Appliance Not Cooling."
2. Control Module	a) Defective (8-hr. DT fails to terminate or CM fails to read DTh)
3. Defrost Safety Thermostat	a) Open. Cut-out: 120°F±5°F (49°C±3°C), Cut-in: 70°F±5°F (21C±3°C)
Freezer Defrost Fails to Terminate - Possible Cause	
1. Defrost Heater	a) Defrost safety thermostat open.
	b) Defective.
2. Defrost Thermistor (Confirm DTh status. See "II.D. Thermistor Check.")	a) Defrost termination temperature 50°F (10°C) not achieved or 1-hr. backup DT fails to terminate.
	b) Defrost thermistor connection loose.
3. Control Module	a) Defrost thermistor connection loose.
	b) Defective.

III. Controls and Adjustments

A. Temperature Settings

1. Temperature Reading

A thermometer with both °F and °C scales is mounted in the cabinet. See Fig. 1.

2. Cabinet Temperature

The appliance features a cabinet temperature control dial (CTCD). The warmest setting is 1 and the coldest setting is 7. See the table for default cabinet temperature control dial settings.

Model	Default Cabinet Temperature Control Dial Setting	Approximate Default Temperature
Undercounter Worktop	Between 4 and 5	Refrigerator: 34°F (1°C) Freezer: -5°F (-21°C)
Prep Table	Between 4 and 5	34°F (1°C)

Fig. 1

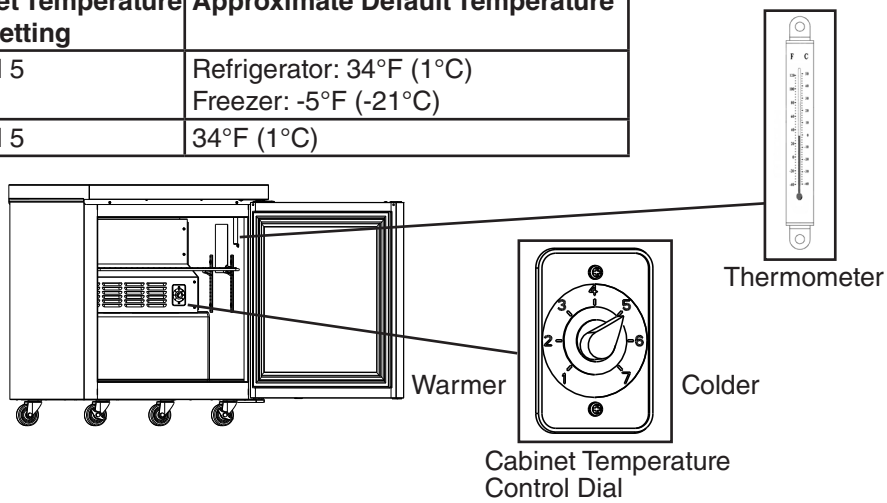

B. Defrost

There are 2 types of defrost: Off Cycle Defrost and Heated Defrost.

Manual Initiation (All Models): Turn the CTCD all the way to the right. Wait 3 sec. then back to original setting. Defrost initiated.

Refrigerator Off Cycle Defrost Automatic Initiation: Compressor cycles off with cabinet setpoint achieved.

Defrost Automatic Initiation: Temperature achieved and defrost timer terminates.

Manual Termination: Turn the CTCD all the way to the right. Wait 3 sec. then back to original setting. Defrost terminated.

Automatic Termination: Cabinet temperature above setpoint, or defrost thermistor above termination temperature, or backup defrost timer terminates.

1. Undercounter and Worktop Refrigerators

Off-Cycle Defrost: Undercounter and worktop refrigerators defrost naturally between run cycles.

Time/Temperature-Initiated Defrost Cycle: Defrost cycle occurs once every 4 hrs. when defrost initiation temperature 41°F (5°C) achieved. If defrost initiation temperature 41°F (5°C) not achieved, 4-hr. min. defrost cycle is skipped, and the 8-hr. max. defrost cycle becomes mandatory. Defrost cycle initiation and termination are controlled by the control module and cabinet thermistor.

Defrost Time is 20 min. for Refrigerators.

2. Prep Table and Freezer

Time/Temperature-Initiated Defrost Cycle: Defrost cycle occurs once every 6 hrs. for prep tables or 8 hrs. for freezers when defrost initiation temperature achieved (50°F (10°C) for Prep Tables or 41°F (5°C) for the Freezers). Defrost cycle initiation and termination are controlled by the control module and defrost thermistor.

Prep Table Refrigerators: The defrost heater energizes, and all other components de-energize during the defrost cycle. There is an in-line defrost safety thermostat.

Freezers: The defrost heater energizes and all other components de-energize during the defrost cycle. There is an in-line defrost safety thermostat.

Minimum Defrost Time is 5 min.
Maximum Defrost Time is 45 min. for Prep Tables and 1 hr. for Freezers.

To initiate a manual defrost cycle follow the steps below.

1) Rotate CTCD all the way to the right. Wait 1 to 5 sec. then rotate back to original setting. Defrost initiated. See Fig. 2.
2) Repeat step 1 to terminate defrost.

Cabinet Temperature Control Dial

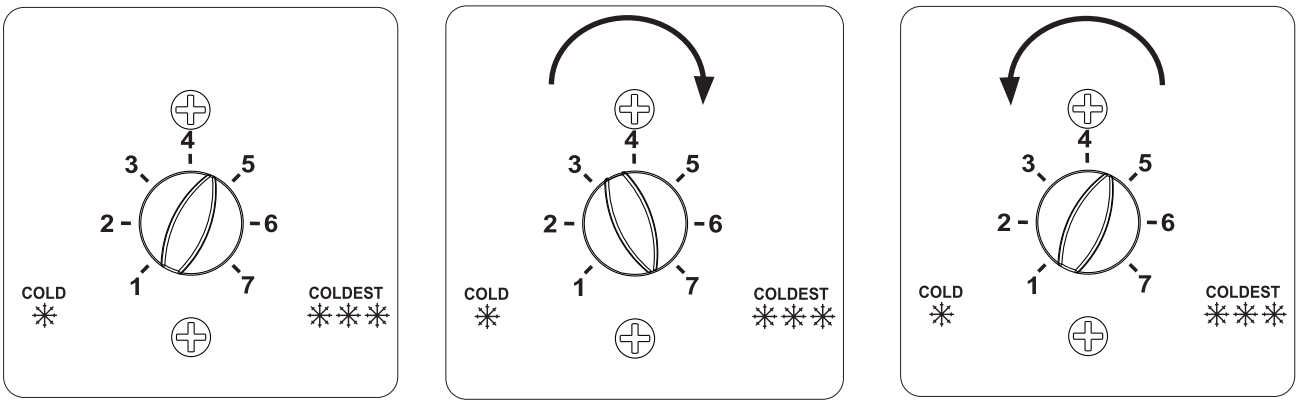

Fig. 2

C. Safety Devices

1. Compressor External or Internal Protector (All Models)

If combined temperature/amperage value is above the limit specified by the compressor manufacturer, the compressor protector operates independently to turn off the compressor. The compressor protector de-energizes the compressor until the temperature/amperage value returns to an acceptable level.

2. High-Pressure Switch

If pressure on the high-side of the appliance exceeds Hoshizaki specifications, the high-pressure switch activates and interrupts the compressor circuit, de-energizing the compressor until the pressure returns to an acceptable level.

If the condenser fan motor is operating and the compressor is off, it is most likely that the compressor protector opened. If both the compressor and condenser fan motor are off, it is most likely the appliance is off or the high-pressure switch has opened.

D. Perimeter and Mullion Heaters

Freezers are equipped with perimeter and mullion heaters. If condensation occurs, check continuity of heaters.

IV. Refrigeration Circuit and Component Service Information

⚠ DANGER

Risk of Fire or Explosion Flammable Refrigerant Used

- Follow handling instructions carefully in compliance with U.S. government regulations.
- Do not use mechanical devices to defrost.
- Do not puncture refrigerant tubing. Risk of fire or explosion due to puncture of refrigerant tubing; follow handling instructions carefully.
- Component parts shall be replaced with like components.
- Servicing shall be done by factory authorized service personnel to minimize the risk of possible ignition due to incorrect parts or improper service.
- Consult instruction manual/service manual before attempting to install or service this product.
- Dispose of properly in accordance with federal or local regulations.
- Do not place any potential ignition sources in or near the appliance.

Risque De Feu Ou D'Explosion Le Frigorigène Est Inflammable

- Suivre attentivement les instructions de manipulation conformément à la réglementation gouvernementale.
- Ne pas utiliser d'appareils mécaniques pour dégivrer le réfrigérateur.
- Ne pas perforer la tubulure contenant le frigorigène. Risque de feu ou d'explosion si la tubulure contenant le frigorigène est perforée; suivre les instructions de manutention avec soin.
- Les pièces des composants doivent être remplacées par des pièces et accessoires équivalents.
- L’entretien doit être effectué par le personnel de service autorisé par le fabricant afin de minimiser les risques d’inflammation attribuables à l’installation d’une pièce inadéquate ou à la mauvaise exécution du service.
- Consulter le manuel du propriétaire/guide de réparation avant de tenter une réparation. Toutes les mesures de sécurité doivent être respectées.
- Éliminer conformément aux règlements fédéraux ou locaux.
- Ne placez aucune source d’inflammation potentielle dans ou près de l’appareil.

⚠ WARNING

- Wear appropriate personal protective equipment (PPE) when servicing the appliance.
- Technician must utilize a combustible gas leak detector at all times.
- Notify everyone in the immediate area that you are working with flammable refrigerant.
- Do not work on appliance in a confined space. Confirm area is well ventilated.
- Identify and eliminate all possible ignition points in a 10 ft. (3 m) area around service area.
- Do not use mechanical devices to defrost.
- Use non-sparking tools.
- Class B dry chemical fire extinguisher or equivalent must be available.
- Do not pressurize system above 200 PSIG during leak check procedure or prior to evacuating refrigeration system.
- This appliance should be diagnosed and repaired only by qualified service personnel to reduce the risk of death, electric shock, serious injury, or fire.
- To reduce the risk of electric shock, do not touch the plug with damp hands.
- Unplug the appliance from the electrical outlet before servicing.
- Make sure all food zones in the appliance are clean after the appliance is serviced.

A. Refrigeration Circuit Service Information

⚠ WARNING

- Repairs requiring the refrigeration circuit to be opened must be performed by properly trained and EPA-certified service personnel.
- Use an electronic leak detector or soap bubbles to check for leaks. Add a trace of refrigerant to the system (if using an electronic leak detector), and then raise the pressure using nitrogen gas (140 PSIG). Do not use R-290 as a mixture with pressurized air for leak testing.

NOTICE

- Always recover the refrigerant and store it in an approved container. Do not discharge the refrigerant into the atmosphere.
- Do not leave the system open for longer than 15 minutes when replacing or servicing parts. The Polyol Ester (POE) oils used in R-290 appliances can absorb moisture quickly. Therefore it is important to prevent moisture from entering the system when replacing or servicing parts.
- Always install a new drier every time the sealed refrigeration system is opened. Do not replace the drier until after all other repair or replacement has been made. Install the new drier with the arrow on the drier in the direction of the refrigerant flow.
- When brazing, protect the drier by using a wet cloth to prevent the drier from overheating. Do not allow the drier to exceed 250°F (121°C).

Refrigerant leaks must be repaired as soon as they are discovered. If not, refrigerant charge should be recovered from the system until the leak can be repaired.
When repairing a leak:

- Repair the leak properly – Remove the refrigerant, examine the leak source, determine the reason for the leak, and carry out the proper course of action.
- Before repairing the leak, ensure that the refrigerant has been recovered and the system purged with nitrogen when brazing.
- Be sure to remove piercing valves attached to the system after repairs are made.

1. Refrigerant Recovery

Using proper refrigerant practices, place piercing valves toward the end (crimped area) of the high and low-side process tubes, then recover the refrigerant into an approved container or device.

2. Brazing

⚠ DANGER

Risk of Fire or Explosion Flammable Refrigerant Used

- Servicing shall be done by factory authorized service personnel to minimize the risk of possible ignition due to incorrect parts or improper service.

Risque De Feu Ou D'Explosion Le Frigorigène Est Inflammable

- L'entretien doit être effectué par le personnel de service autorisé par le fabricant afin de minimiser les risques d'inflammation attribuables à l'installation d'une pièce inadéquate ou à la mauvaise exécution du service.

⚠ WARNING

- Wear appropriate personal protective equipment (PPE) when servicing the appliance.
- You must have a combustible gas leak detector in the immediate work area at all times.
- You must have a Class B chemical fire extinguisher available at all times.
- Notify all persons in the immediate area that you are working with a flammable refrigerant.
- Do not use silver alloy or copper alloy containing arsenic.
- Be sure the area is clear of refrigerant vapor before brazing.

1) Braze/repair/replace damaged component or fitting.
2) Purge with nitrogen gas for 2 min. Then braze all fittings while purging with nitrogen gas flowing at a pressure of 3 to 5 PSIG.

NOTICE

- Always install a new drier every time the sealed refrigeration system is opened.
- Do not replace the drier until after all other repair or replacement has been made. Install the new drier with the arrow on the drier in the direction of the refrigerant flow.
- When brazing, protect the drier by using a wet cloth to prevent the drier from overheating. Do not allow the drier to exceed 250°F (121°C).

3) Use soap bubbles to check for leaks. Raise the pressure using nitrogen gas (190 PSIG). Do not use any refrigerant as a mixture with pressurized air for leak testing.
4) Once leak checking is complete, release the nitrogen gas from the system.

3. Evacuation

1) Attach a vacuum pump to the system. Be sure to connect the charging hoses to both high and low-side refrigerant piercing valves.

IMPORTANT
The vacuum level and vacuum pump may be the same as those for current refrigerants. However, the rubber hose and gauge manifold to be used for evacuation and refrigerant charge should be exclusively for POE oils.

2) Turn on the vacuum pump, then open the gauge manifold valves. Never allow the oil in the vacuum pump to flow backwards.
3) Allow the vacuum pump to pull down to a 29.9" Hg vacuum (500 microns). Evacuating period depends on pump capacity.
4) Close the low-side valve and high-side valve on the gauge manifold.
5) Disconnect the gauge manifold hose from the vacuum pump and attach it to a refrigerant service cylinder. Remember to loosen the connection and purge the air from the hose. For the required refrigerant charge, see the nameplate. Hoshizaki recommends only virgin or reclaimed refrigerant which meets ARI Standard 700 (latest edition) be used.

4. Recharge

6) R-290 can be charged in either the liquid or vapor state.
   Liquid charge is preferred. If refrigerant charging is done in the liquid state, place the service cylinder on the scales; **if the service cylinder is not equipped with a dip tube, invert the service cylinder, then place it on the scales.** Open the high-side valve on the gauge manifold.
7) Allow the system to charge with liquid until the proper charge weight is met.
8) Close the high-side valve on the gauge manifold. If charging is complete, skip to step 10.
9) If necessary, add any remaining charge to the system through the low-side.
   NOTICE! **To prevent compressor damage, use a throttling valve or liquid dispensing device to add the remaining liquid charge through the low-side refrigerant access valve with the compressor running.** Close the refrigerant cylinder valve and let the low-side refrigerant equalize to the system, then close the low-side manifold gauge. Move the power switch to the "OFF" position (if applicable) or unplug the appliance from the electrical outlet.
10) Pinch off (crimp down) the process tubes just below the piercing valves.
11) Remove the piercing valves. Cut the process tubes to remove the piercing valve holes then braze the process tubes closed. Note: Be sure there is no refrigerant leak before brazing.
12) Use a combustible gas leak detector or soap bubbles to check for leaks again.
13) Place red sleeves over the process tubes.
14) Plug the appliance back into the electrical outlet.

B. Component Service Information

NOTICE
When replacing a component listed below, see the notes to help ensure proper operation.

Component	Notes
Compressor	Install a new start relay and compressor external protector. **WARNING! To reduce the risk of electric shock, be sure to reconnect the compressor's ground wire.**
Defrost Thermistor	After working with or around the defrost thermistor on a freezer, make sure the defrost thermistor wire is not touching the defrost heater.

V. Preparing the Appliance for Periods of Non-Use

When shutting down the appliance for periods of non-use, follow the instructions below.

⚠ WARNING
Prevent the doors from closing to reduce the risk of children getting trapped.

NOTICE
Clean the cabinet interior, door gaskets, and shelves.

1) Before shutting down the appliance, move the stored food into another refrigerator or freezer.
2) Unplug the appliance. **WARNING! To reduce the risk of electric shock, do not touch the plug with damp hands.**

VI. Disposal

⚠ DANGER

Risk of Fire or Explosion Flammable Refrigerant Used

- Follow handling instructions carefully in compliance with U.S. government regulations.
- Do not puncture refrigerant tubing. Risk of fire or explosion due to puncture of refrigerant tubing; follow handling instructions carefully.
- Dispose of properly in accordance with federal or local regulations.

Risque De Feu Ou D'Explosion Le Frigorigène Est Inflammable

- Suivre attentivement les instructions de manipulation conformément à la réglementation gouvernementale.
- Ne pas perforer la tubulure contenant le frigorigène. Risque de feu ou d'explosion si la tubulure contenant le frigorigène est perforée; suivre les instructions de manutention avec soin.
- Éliminer conformément aux règlements fédéraux ou locaux.

⚠ WARNING

When preparing the appliance for disposal, remove the doors/drawers to reduce the risk of children getting trapped. Leave any shelves in place so that children may not easily climb inside.

The appliance contains refrigerant and must be disposed of in accordance with applicable national, state, and local codes and regulations. Refrigerant must be recovered by properly certified service personnel.

VII. Technical Information

A. Electrical and Refrigerant Data

Model (includes drawer models)	AC Supply Voltage	Amperes	Design Pressure (PSIG) HIGH	Design Pressure (PSIG) LOW	Refrigerant (oz.) R290
U/WR27A(-xxx)	115/60/1	2.5	360	190	2.3
UR27A-GLP01		2.9			
U/WF27A(-xx)	115/60/1	2.5	360	190	2.1
UF27A-LP		2.3			
UF27A-GLP01		2.0			
SR27A-(xxxxx)	115/60/1	2.4	360	190	2.3
U/WR36A(-xx)	115/60/1	2.4	360	190	2.3
SR36A(-xxx)	115/60/1	2.7	360	190	2.1
U/WR48A(-01)	115/60/1	2.6	360	190	3.0
U/WR48A-D2(-D4)		2.8			
UR48A-GLP01	115/60/1	2.7	360	190	2.6
U/WF48A(-xx)	115/60/1	5.9	360	190	3.2
U/WF48A-D4					3.0
SR48A-(xxxxx)	115/60/1	2.5	360	190	2.9
U/WR60A(-01)	115/60/1	3.1	360	190	2.8
U/WR60A(-Dx)		3.3			
U/WF60A(-xx)	115/60/1	5.6	360	190	3.9
SR60A-(xxxxx)	115/60/1	5.9	360	190	3.1
U/WR72A(-01)	115/60/1	2.9	360	190	3.9
U/WR72A(-D6)		3.5			
SR72A-(xxxxx)	115/60/1	6.3	360	190	3.4

See the nameplate for electrical and refrigeration specifications. The nameplate is located inside the cabinet.
We reserve the right to make changes in specifications and design without prior notice.

Legend: U/WR–undercounter/worktop refrigerator;
SR–prep table;
U/WF–undercounter/worktop freezer

B. Wiring Diagrams

1. Undercounter and Worktop: Refrigerator

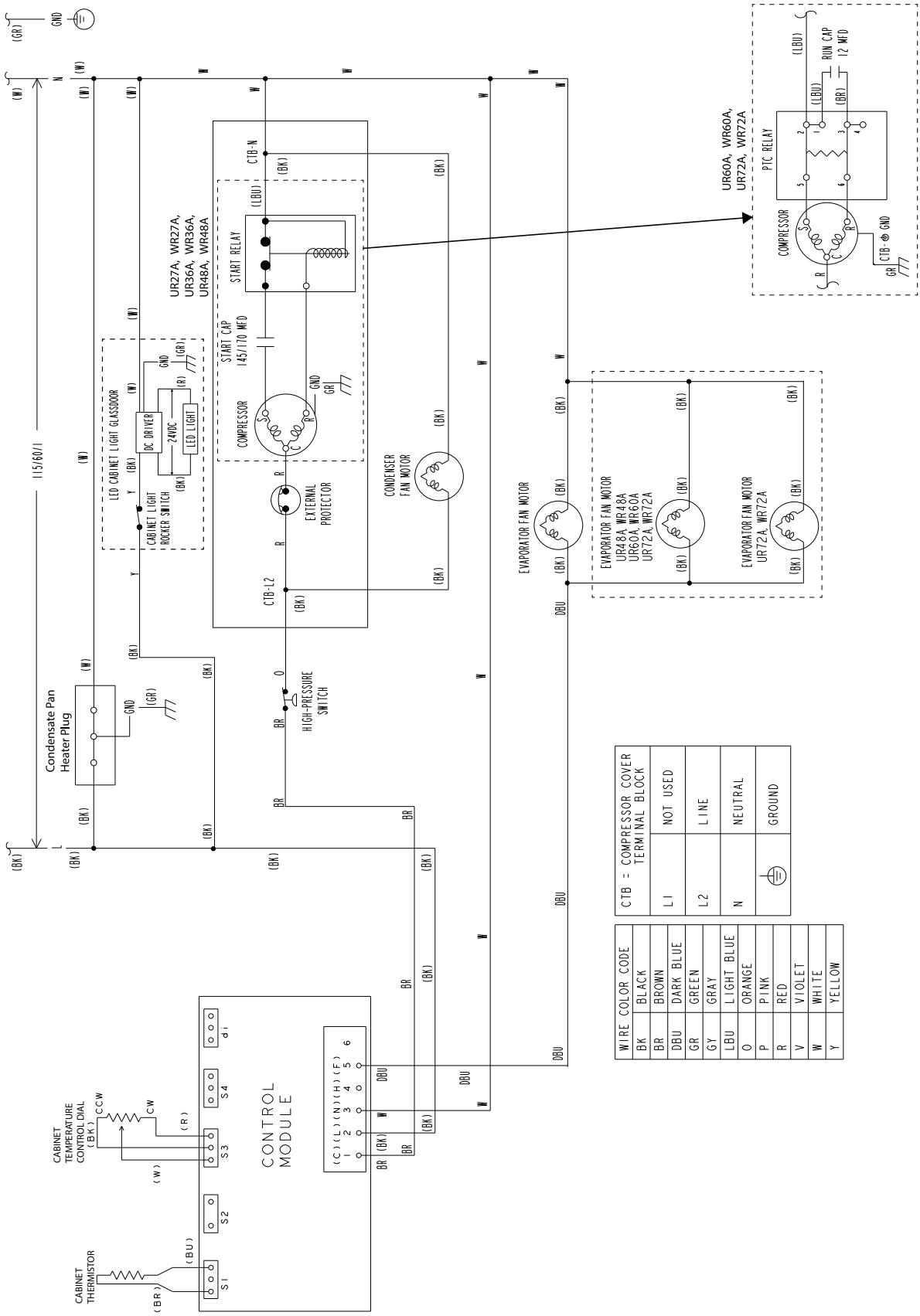

2. Prep Table

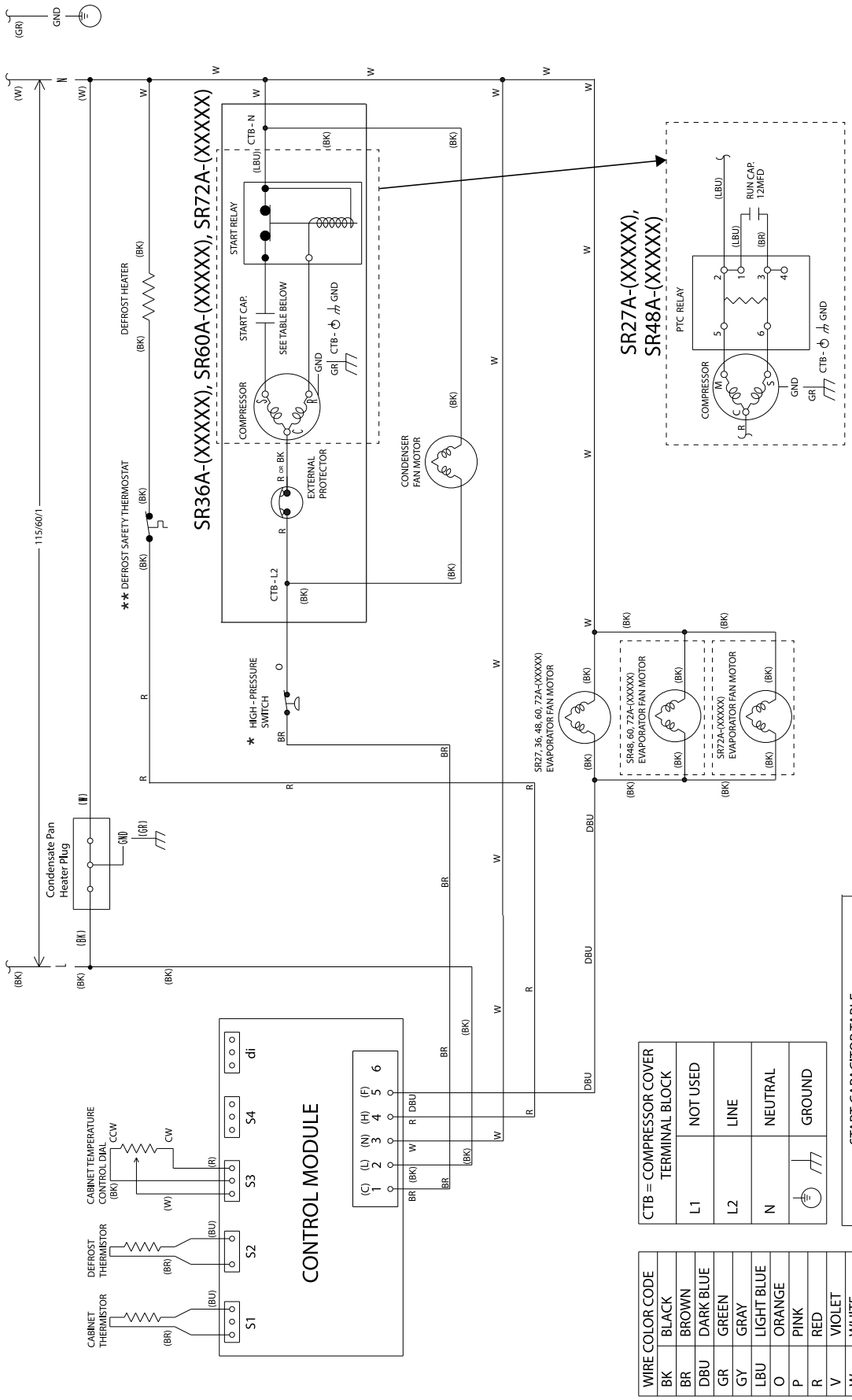

** Defrost Thermostat	
Cut-Out	120°F±5°F (49°C±3°C)
Cut-In	70°F±5°F (21°C±3°C)

* High-Pressure Switch	
Cut-Out	300±10 PSIG
Cut-In	190±20 PSIG

CTB = COMPRESSOR COVER TERMINAL BLOCK	
L1	NOT USED
L2	LINE
N	NEUTRAL
⏚	GROUND

START CAPACITOR TABLE	
MODEL	START CAP.
SR36A-(XXXXX)	145-170MFD @ 250 VAC
SR60A-(XXXXX)	378-454MFD @ 220 VAC
SR72A-(XXXXX)	

WIRE COLOR CODE	
BK	BLACK
BR	BROWN
DBU	DARK BLUE
GR	GREEN
GY	GRAY
LBU	LIGHT BLUE
O	ORANGE
P	PINK
R	RED
V	VIOLET
W	WHITE
Y	YELLOW

3. Undercounter and Work Top: Freezer

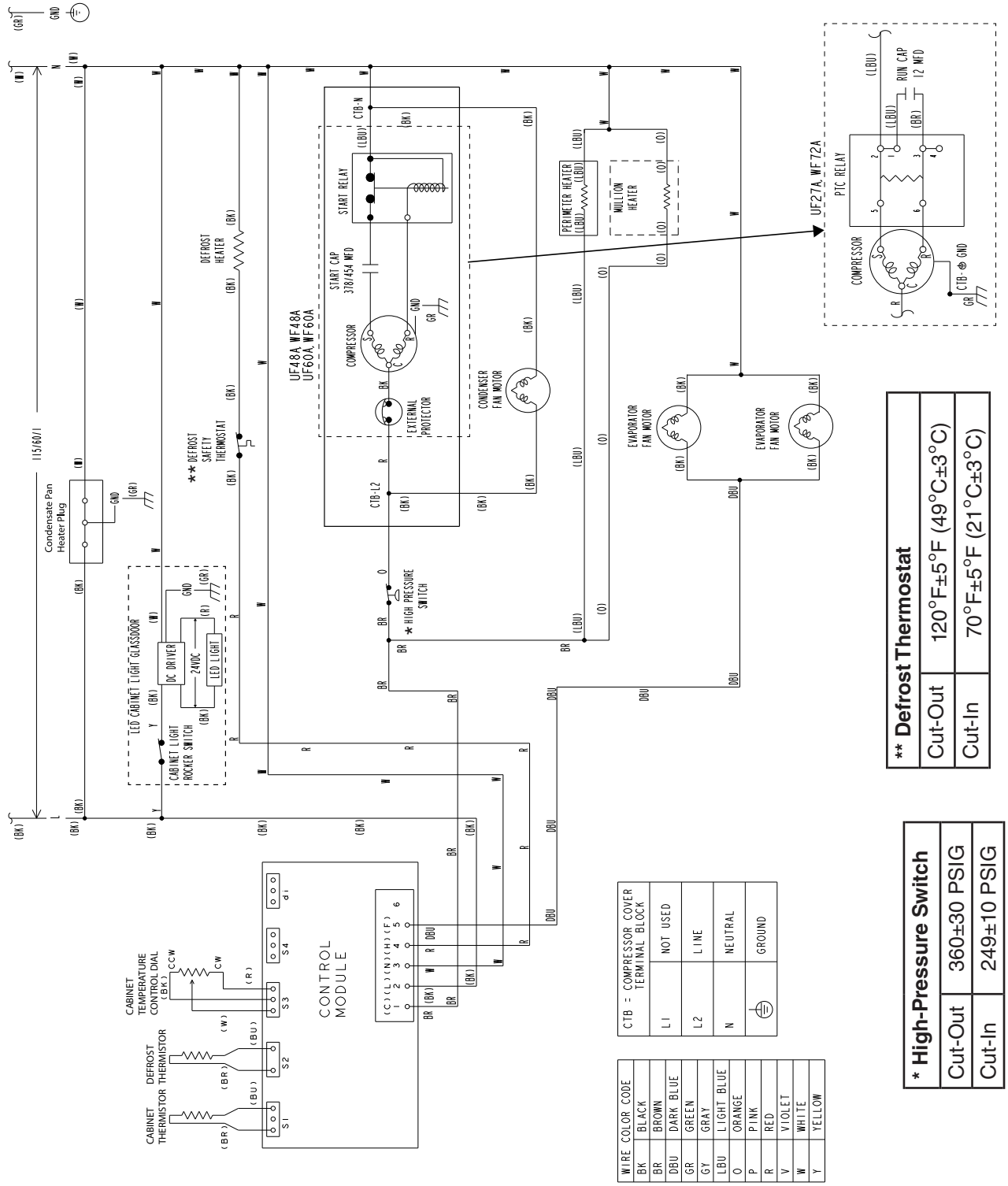

CTB = COMPRESSOR COVER TERMINAL BLOCK	
L1	NOT USED
L2	LINE
N	NEUTRAL
⏚	GROUND

WIRE COLOR CODE	
BK	BLACK
BR	BROWN
DBU	DARK BLUE
GR	GREEN
GY	GRAY
LBU	LIGHT BLUE
O	ORANGE
P	PINK
R	RED
V	VIOLET
W	WHITE
Y	YELLOW

** Defrost Thermostat	
Cut-Out	120°F±5°F (49°C±3°C)
Cut-In	70°F±5°F (21°C±3°C)

* High-Pressure Switch	
Cut-Out	360±30 PSIG
Cut-In	249±10 PSIG